PORTINOX
THIELMANN CONTAINER SYSTEMS

50 1965 - 2015 YEARS TRANSFORMING **STAINLESS STEEL**

portinox.com

Stainless Steel SANITARY**WARE**

- WASH BASINS
- URINALS
- WC PANS
- SHOWER TRAYS
- UTILITY SINKS
- BATHROOM ACCESSORIES
- PENAL WARE
- DRINKING FOUNTAINS

WASH BASINS 04

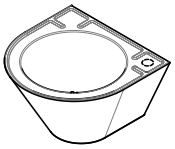

URINALS 17

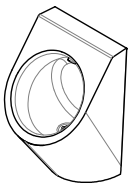

WC PANS 23

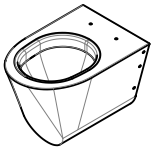

SHOWER TRAYS 38

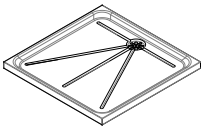

UTILITY SINKS 40

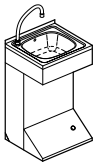

BATHROOM ACCESSORIES 43

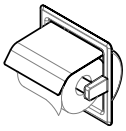

PENAL WARE 50

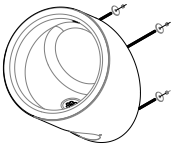

DRINKING FOUNTAINS 57

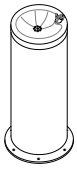

THE COMPANY SANITARYWARE.

PORTINOX
THIELMANN CONTAINER SYSTEMS

PORTINOX designs and manufactures a wide range of stainless steel sanitary products suitable for a variety of different applications. Our products are easy to install, heavy duty, hygienic and require low maintenance having a stylish and ergonomic design to fit both public bathrooms and harsh environments such as prisons and detention centres.

Our comprehensive range of sanitary ware products has been designed in stainless steel AISI- 304 (1.4301 / V2A / BS 304 S31), to meet the needs of an ever demanding market for vandal resistant products in penal institutions, sports facilities, medical centres, leisure areas and public bathrooms.

We are pleased to release our new sanitary catalogue in order to bring up to date the latest improvements on our existing products and to announce our new product developments.

Our Product Development Engineers are always available to provide technical assistance when required during the whole process of your project specification stages.

Product Innovation and investment into new technologies are a must within our Continuous Improvement Department where we always strive to provide
high-quality and durable products to meet our customer needs.

PORTINOX belongs to Teka Group

Teka

Main Sponsor

Realmadrid Baloncesto

PRODUCT IMAGE AND DRAWING

LVR-36-E

VANITY BOWL

Eccentric, round vanity bowl for surface mounting. Made of 1mm thick stainless steel AISI-304 18/10 (1.4301). Stamped in one piece. Bowl size Ø360mm and universal hole drain Ø70/Ø50.

Standard supply:

VT	Universal drain
W114	Basin Waste Outlet 1 ¼" x Ø70mm flange with plung. DN-32, (EN-274)
P1	Interior polished finish

On request:

P2	Interior and exterior polished finish
T22	Tap hole Ø22mm
T35	Tap hole Ø35mm
FS	Fixing brackets surface mounting
W112	Basin Waste Outlet 1 ½"x Ø70mm flange with plung. DN-40, (EN-274)
DL	Perforated drain (More hygienic without flange plug)
OF	Overflow (uncertified EN-274)

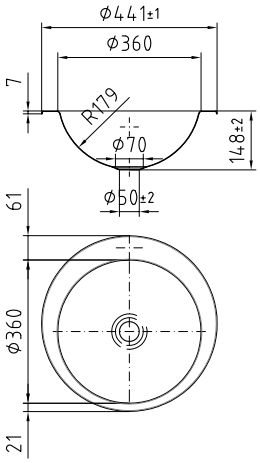

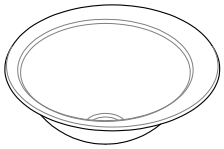

REFERENCE	FEATURES	DIMENSIONS
LVR-36-E	Standard supply (VT, W114, PI)	Ø440x150 mm

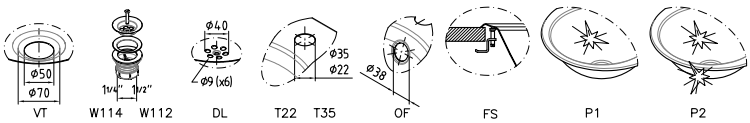

LVR-36-C

VANITY BOWL

Round vanity bowl for surface, under or glued mounting. Made of 1mm thick stainless steel AISI-304 18/10 (1.4301). Stamped in one piece. Bowl size Ø360mm and universal hole drain Ø70/Ø50.

Standard supply:

VT	Universal drain
W114	Basin Waste Outlet 1 ¼" x Ø70mm flange with plung. DN-32, (EN-274)
P1	Interior polished finish

On request:

P2	Interior and exterior polished finish
FS	Fixing brackets for surface mounting
FU	Fixing brackets under mounting
W112	Basin Waste Outlet 1 ½" x Ø70mm flange with plung. DN-40, (EN-274)
DL	Perforated drain (More hygienic without flange plug)
OF	Overflow (uncertified EN-274)

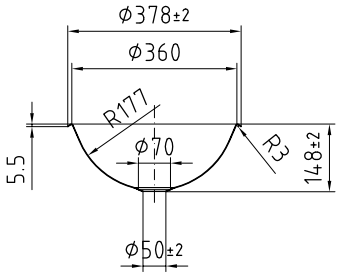

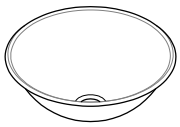

REFERENCE	FEATURES	DIMENSIONS
LVR-36-C	Standard supply (VT, W114, PI)	Ø380x150 mm

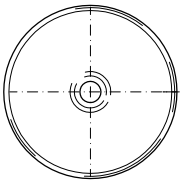

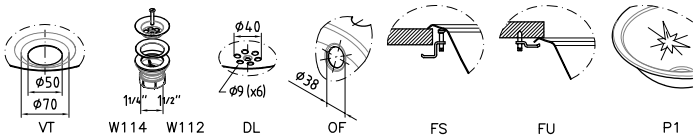

PRODUCT IMAGE AND DRAWING

LVR-32-C

VANITY BOWL

Round vanity bowl for surface, under or glued mounting. Made of 1mm thick stainless steel AISI-304 18/10 (1.4301). Stamped in one piece. Bowl size Ø320mm and universal hole drain Ø70/Ø50.

Standard supply:
VT Universal drain
W114 Basin Waste Outlet 1 ¼" x Ø70mm flange with plung. DN-32, (EN-274)
P1 Interior polished finish

On request:
P2 Interior and exterior polished finish
FS Fixing brackets for surface mounting
FU Fixing brackets under mounting
W112 Basin Waste Outlet 1 1/2"x Ø70mm flange with plung. DN-40, (EN-274)
DL Perforated drain (More hygienic without flange plug)
OF Overflow (uncertified EN-274)

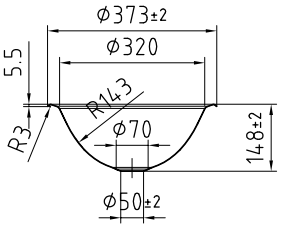

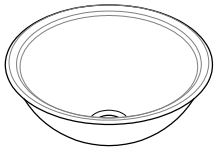

REFERENCE	FEATURES	DIMENSIONS
LVR-32-C	Standard supply (VT, W114, PI)	Ø370x150 mm

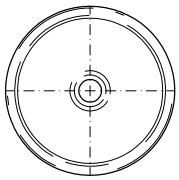

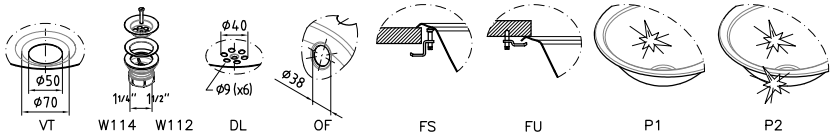

LVR-32-CR

VANITY BOWL

Round vanity bowl for surface, under or glued mounting. Made of 1mm thick stainless steel AISI-304 18/10 (1.4301). Stamped in one piece. Bowl size Ø320mm and universal hole drain Ø70/Ø50.

Standard supply:
VT Universal drain
W114 Basin Waste Outlet 1 ¼" x Ø70mm flange with plug. DN-32, (EN-274)
P1 Interior polished finish

On request:
P2 Interior and exterior polished finish
FS Fixing brackets for surface mounting
FU Fixing brackets under mounting
W112 Basin Waste Outlet 1 1/2"x Ø70mm flange with plug. DN-40, (EN-274)
DL Perforated drain (More hygienic without flange plug)
OF Overflow (uncertified EN-274)

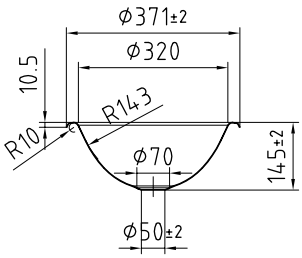

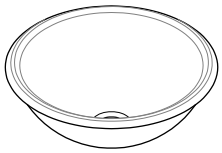

REFERENCE	FEATURES	DIMENSIONS
LVR-32-CR	Standard supply (VT, W114, PI)	Ø370x150 mm

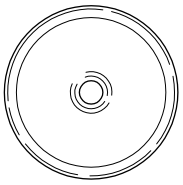

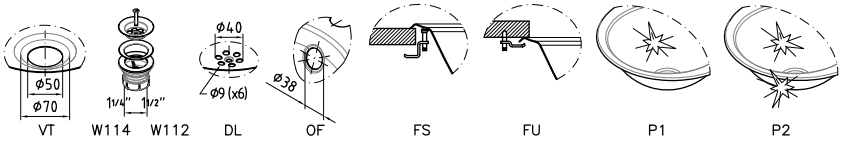

PRODUCT IMAGE AND DRAWING

LVO-OVAL

VANITY BOWL

Oval vanity bowl for surface, under or glued mounting. Made of 1mm thick stainless steel AISI-304 18/10 (1.4301). Stamped in one piece. Bowl size 330x450mm and universal hole drain Ø70/Ø54, without basin waste outlet.

Standard supply:
VT Universal drain
P1 Interior polished finish

On request:
P2 Interior and exterior polished finish
FS Fixing brackets for surface mounting
FU Fixing brackets under mounting
OF Overflow (uncertified EN-274)

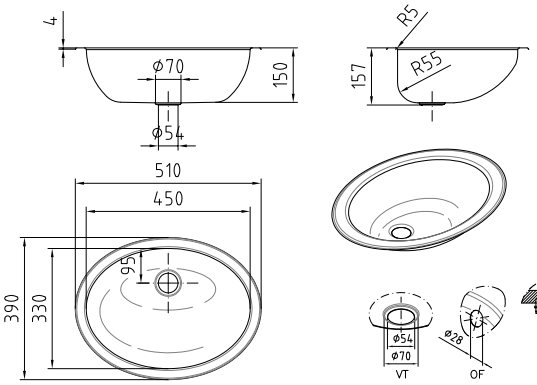

REFERENCE	FEATURES	DIMENSIONS
LVO	Standard supply (VT, PI)	510x390x160 mm

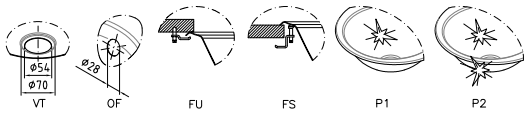

LVR-32-S

SINGLE WASH BASIN

Wall hung wash basin made of stainless steel AISI-304 (1.4301). Stamped bowl, size Ø320x145mm. A vandal-proof waste valve and bottle trap of 1 1/2". Accessible through service panel. Without supply of mural fixation.

Standard supply:
DL Perforated drain (Vandal proof and more hygienic without plug)
W112 Basin Waste Outlet 1 ½", DN-40, (EN-274)
S Brushed finish

On request:
T22 Tap hole Ø22mm
T35 Tap hole Ø35mm
P Polished finish

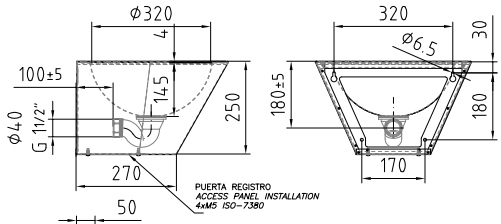

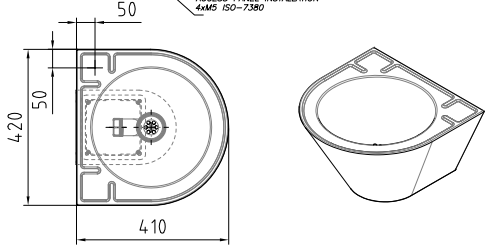

REFERENCE	FEATURES	DIMENSIONS
LVR-32-S	Standard supply (DL, W112, S)	420x410x2500 mm

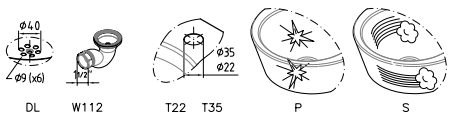

PRODUCT IMAGE AND DRAWING

LVR-36-S

SINGLE WASH BASIN

Wall hung wash basin made of stainless steel AISI-304 (1.4301). Stamped bowl, size Ø360x145mm. A vandal-proof waste valve and bottle trap of 1 1/2". Accessible through service panel. No supply of mural fixation.

Standard supply:

DL	Perforated drain (Vandal proof and more hygienic without flange plug)
W112	Basin Waste Outlet 1 ½", DN-40, (EN-274)
S	Brushed finish

On request:

T22	Tap hole Ø22mm
T35	Tap hole Ø35mm
P	Polished finish

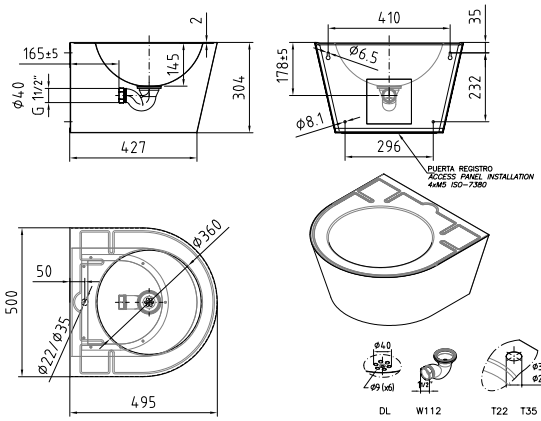

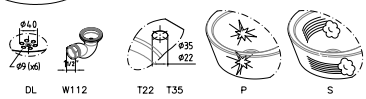

REFERENCE	FEATURES	DIMENSIONS
LVR-36-S	Standard supply (DL, W112, S)	500x495x305 mm

LVR-36-N

SINGLE WASH BASIN

Wall hung wash basin made of stainless steel AISI-304 (1.4301). Stamped bowl, size Ø360x145mm. Not supply of mural fixation.

Standard supply:

VT	Universal drain
S2	Interior and exterior brushed finish

On request:

P2	Interior and exterior polished finish
DL	Perforated drain (More hygienic without flange plug)
T22	Tap hole Ø22mm
T35	Tap hole Ø35mm
OF	Overflow (uncertified EN-274).
W114	Basin Waste Outlet 1 ¼", DN-32, (EN-274)
W112	Basin Waste Outlet 1 ½", DN-40, (EN-274)

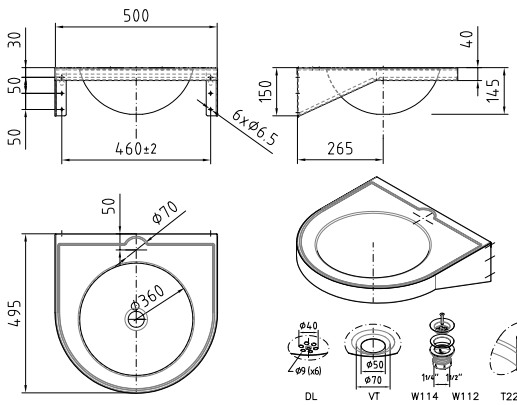

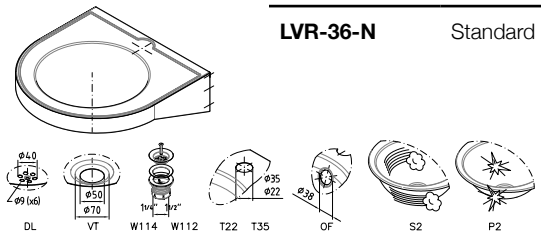

REFERENCE	FEATURES	DIMENSIONS
LVR-36-N	Standard supply (VT, S2)	500x495x150 mm

PRODUCT IMAGE AND DRAWING

LVR-36-NC

SINGLE WASH BASIN

Wall hung wash basin made of stainless steel AISI-304 (1.4301). Stamped bowl, size Ø360x145mm. Not supply of mural fixation.

Standard supply:
VT Universal drain
S Brushed finish

On request:
P Polished finish
DL Perforated drain (More hygienic without flange plug)
T22 Tap hole Ø22mm
T35 Tap hole Ø35mm
OF Overflow (uncertified EN-274)
W114 Basin Waste Outlet 1 ¼", DN-32, (EN-274)
W112 Basin Waste Outlet 1 ½", DN-40, (EN-274)

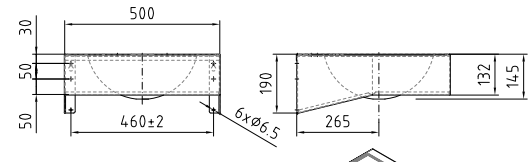

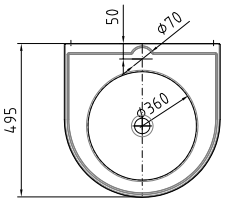

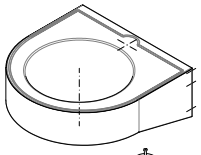

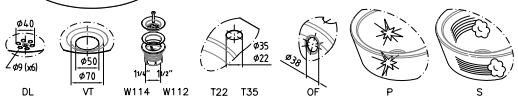

REFERENCE	FEATURES	DIMENSIONS
LVR-36-NC	Standard supply (VT, S)	500x495x150 mm

LVR-OMEGA

SINGLE WASH BASIN

Wall hung wash basin made of 1mm thick of stainless steel AISI-304 (1.4301). Stamped bowl, size Ø320x145mm. Not supply of mural fixation.

Standard supply:
VT Universal drain
S Brushed finish

On request:
P Polished finish
DL Perforated drain (More hygienic without flange plug)
T22 Tap hole Ø22mm
T35 Tap hole Ø35mm
OF Overflow (uncertified EN-274)
W114 Basin Waste Outlet 1 ¼", DN-32, (EN-274)
W112 Basin Waste Outlet 1 ½", DN-40, (EN-274)

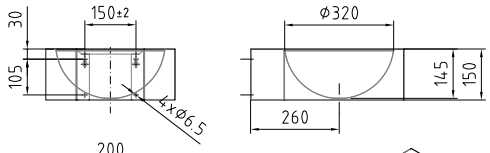

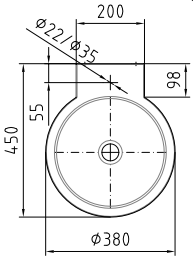

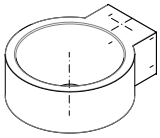

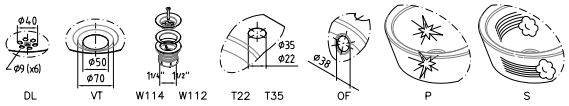

REFERENCE	FEATURES	DIMENSIONS
LVR-OMEGA	Standard supply (VT, S)	450x380x150 mm

PRODUCT IMAGE AND DRAWING

LVR-ALPHA

SINGLE WASH BASIN ANGLE

Wall hung wash basin angle made of 1mm thick of stainless steel AISI-304 (1.4301). Stamped bowl, size Ø320x145mm. Not supply of mural fixation.

Standard supply:

VT	Universal drain
S	Brushed finish

On request:

P	Polished finish
DL	Perforated drain (More hygienic without flange plug)
T22	Tap hole Ø22mm
T35	Tap hole Ø35mm
OF	Overflow (uncertified EN-274)
W114	Basin Waste Outlet 1 ¼", DN-32, (EN-274)
W112	Basin Waste Outlet 1 ½", DN-40, (EN-274)

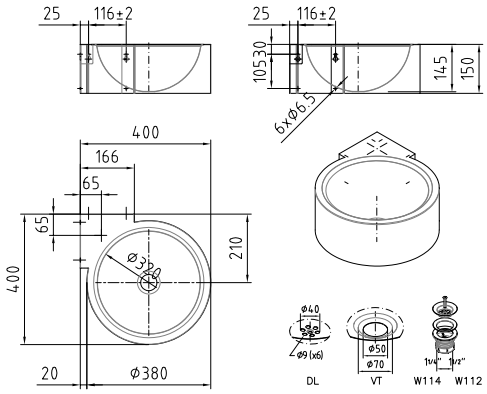

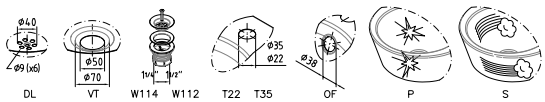

REFERENCE	FEATURES	DIMENSIONS
LVR-ALPHA	Standard supply (VT, S)	450x380x150 mm

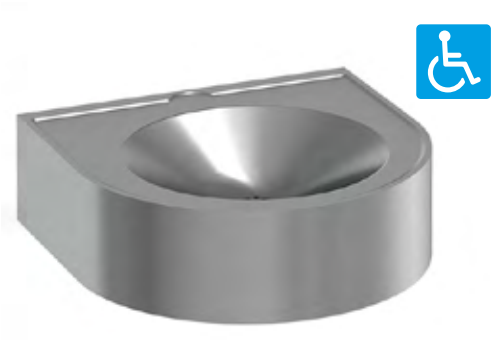

LVR-H-36

NEW

WALL MOUNTED WASH BASIN - DISABLED

Wall hung wash basin disabled made of stainless steel AISI-304 (1.4301). Stamped bowl, size Ø360x145mm. Not supply of mural fixation.

Standard supply:

DL	Perforated drain (More hygienic without flange plug)
S	Brushed finish
W114	Basin Waste elbow Outlet Ø32, 1 ¼" x 60, DN-32, (EN-274)

On request:

P	Polished finish
T22	Tap hole Ø22mm
T35	Tap hole Ø35mm

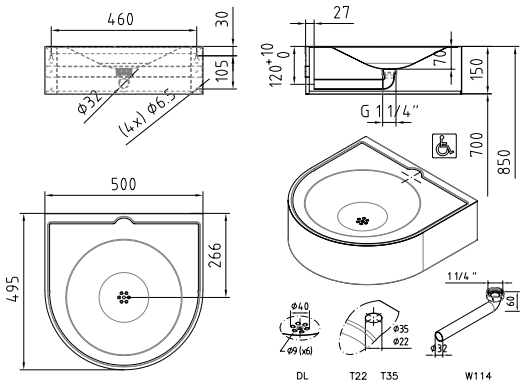

REFERENCE	FEATURES	DIMENSIONS
LVR-H-36	Standard supply (DL, S, W114)	500x495x150 mm

PRODUCT IMAGE AND DRAWING

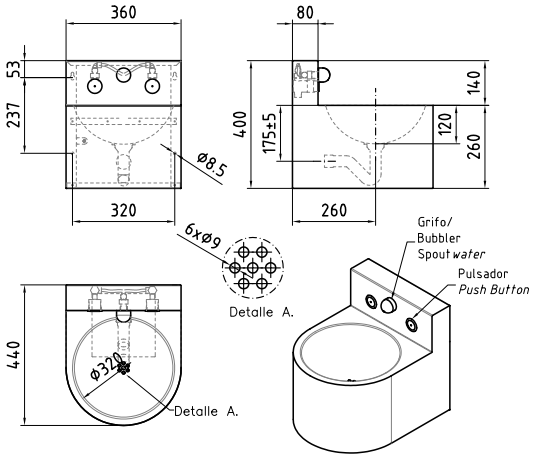

LVR-32-SC-R-1B-F

ELECTRONICALLY OPERATED

NEW

WALL HUNG WASH BASIN - HEAVY DUTY

Made of stainless steel AISI-304 (1.4301), 1,5 mm. thickness. It includes a draining hole, waste valve. Accessible through service panel.

- Vandal resistant bubbler
- Backsplash in 140 mm

On request:
- Polished finish
- Additioned push button

***ELECTRONICALLY OPERATED VERSION AVAILABLE**

REFERENCE	FEATURES	DIMENSIONS
LVR-32-SC-R-1B-F	1 Push button	360x430X400 mm
LVR-32-SC-R-2B-F	2 Push button	360x430X400 mm

LVE-600

WALL MOUNTED WASH BASIN

Wall mounted wash basin made of 1.2mm thick stainless steel AISI-304 (1.4301). Satin finished. Frontal round edges and back splash at 100mm high.

Bowl diameter: Ø 360mm.

On request:
Special sizes
Brushed finish
Tap holes

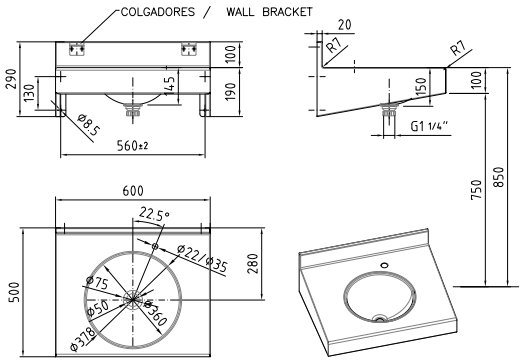

REFERENCE	FEATURES	DIMENSIONS
LVE-600	1 bowl	600x500x290 mm

PRODUCT IMAGE AND DRAWING

LVE-1200

WASH TROUGH

Wash trough made of 1.2mm thick stainless steel AISI-304 (1.4301). Satin finished. Frontal round edges and back splash at 100mm high.

Bowl diameter: Ø 360mm.

On request:
Special sizes
Brushed finish
Tap holes
Self-closing taps

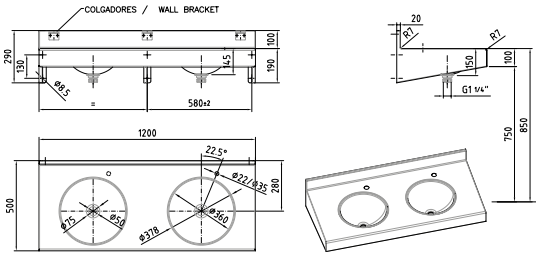

REFERENCE	FEATURES	DIMENSIONS
LVE-1200	2 bowls	1200x500x290 mm

LVE-1800

WASH TROUGH

Wash trough made of 1.2mm thick stainless steel AISI-304 (1.4301). Satin finished. Frontal round edges and back splash at 100mm high.

Bowl diameter: Ø 360mm.

On request:
Special sizes
Brushed finish
Tap holes
Self-closing taps

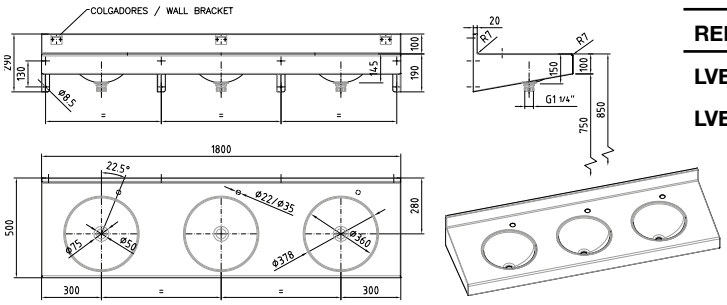

REFERENCE	FEATURES	DIMENSIONS
LVE-1800	3 bowls	1800x500x290 mm
LVE-2400	4 bowls	2400x500x290 mm

PRODUCT IMAGE AND DRAWING

LVC

WASH TROUGH

Wash trough manufactured from stainless steel AISI-304 (1.4301). Surface satin finish.

On request:
Customized sizes available

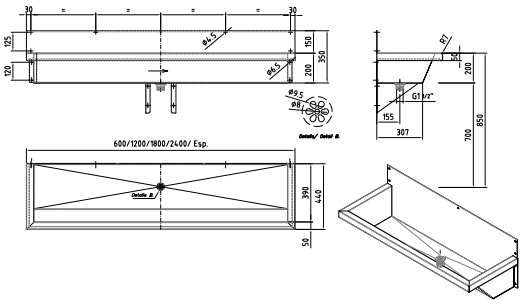

REFERENCE	FEATURES	DIMENSIONS
LVC-600	Brushed finish	600x440x350 mm
LVC-1200	Brushed finish	1200x440x350 mm
LVC-1800	Brushed finish	1800x440x350 mm
LVC-2400	Brushed finish	2400x440x350 mm

LVC-P

WASH TROUGH

Wash trough manufactured from stainless steel AISI-304 (1.4301). Surface satin finish.

On request:
Customized sizes available
Tap Holes
Self-closing taps

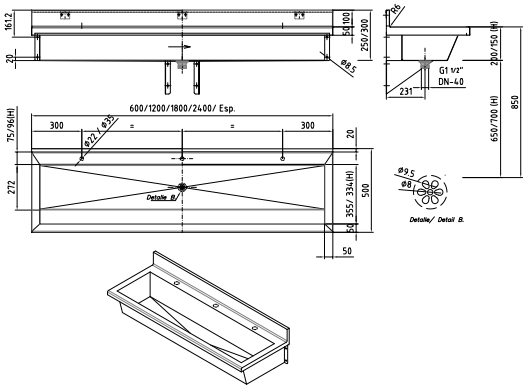

REFERENCE	FEATURES	DIMENSIONS
LVC-P-600	Brushed finish	600x500x300 mm
LVC-P-1200	Brushed finish	1200x500x300 mm
LVC-P-1800	Brushed finish	1800x500x300 mm
LVC-P-2400	Brushed finish	2400x500x300 mm

PRODUCT IMAGE AND DRAWING

LVC-G

NEW

WASH TROUGH

Wall mounted wash trough manufactured from stainless steel AISI-304 (1.4301). Satin finish.

On request:
- Customized sizes available
- Holes for self-closing taps on backsplash
- Stainless steel supporting legs

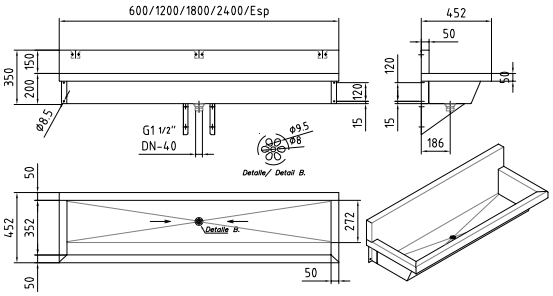

REFERENCE	FEATURES	DIMENSIONS
LVC-G-1200	Wash trough 1200 mm length	1200 x 450 x 350 mm
LVC-G-1800	Wash trough 1800 mm length	1800 x 450 x 350 mm
LVC-G-2400	Wash trough 2400 mm length	2400 x 450 x 350 mm

LVC-G-D

NEW

DOUBLE WASH TROUGH

Double sided wash trough with legs manufactured from stainless steel AISI-304 (1.4301). Satin finish. 2 Stainless steel supporting legs are supplied with this wash trough.

On request:
- Customized sizes available
- Holes for self-closing taps on backsplash

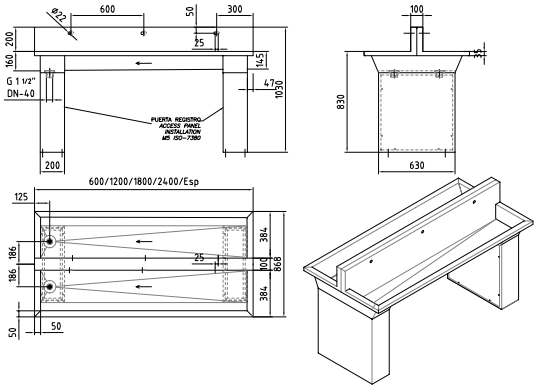

REFERENCE	FEATURES	DIMENSIONS
LVC-G-1200-D	Wash trough 1200 mm length	1200 x 900 x 1030 mm
LVC-G-1800-D	Wash trough 1800 mm length	1800 x 900 x 1030 mm
LVC-G-2400-D	Wash trough 2400 mm length	2400 x 900 x 1030 mm

PRODUCT IMAGE AND DRAWING

LVC-I

BEST SELLER

WASH TROUGH - WITH BACKSPLASH

Wall mounted ash trough manufactured from stainless steel AISI-304 (1.4301). Satin finish. Supplied with wall brackets, wall panel and 1 1/2” grated waste.

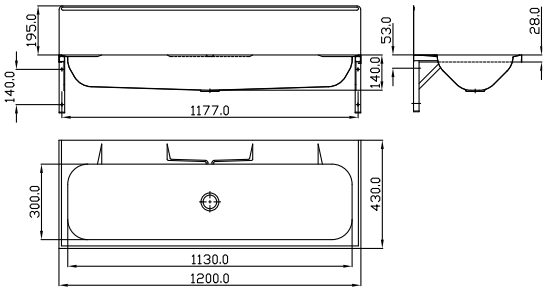

REFERENCE	FEATURES	DIMENSIONS
LVC-I-1200	Brushed finish	1200 x 430 x 335 mm
LVC-I-1800	Brushed finish	1800 x 430 x 335 mm

LVC-IN

BEST SELLER

WASH TROUGH - WITH BACKSPLASH

Wall mounted ash trough manufactured from stainless steel AISI-304 (1.4301). Satin finish. Supplied with wall brackets, corner protectors and 1 1/2” grated waste.

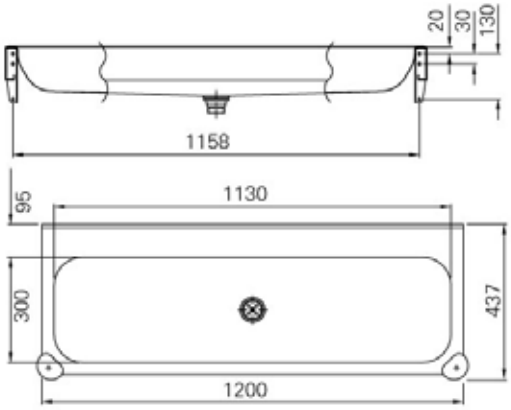

REFERENCE	FEATURES	DIMENSIONS
LVC-IN-1200	Brushed finish	1200 x 430 x 140 mm
LVC-IN-1800	Brushed finish	1800 x 430 x 140 mm

PRODUCT IMAGE AND DRAWING

LVR-D-525

BEST SELLER

DESIGN WALL MOUNTED WASH BASIN

Hand Wash Basin manufactured in stainless steel 18/10, for wall mounting installation. The hand wash basin is pressed in one piece and has laser-cut integrated outlet holes that are concealed by a removable outlet cover. Supplied with waste under part and overflow kit.

Bowl size: 500 x 310 x 83 mm
Dimensions: 525 x 400 x 97 mm

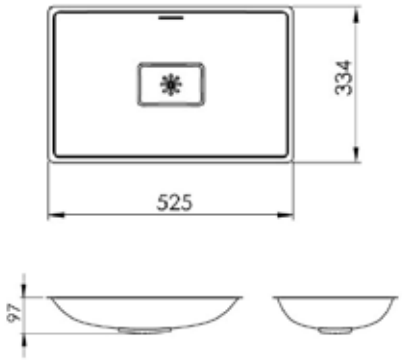

REFERENCE	FEATURES	DIMENSIONS
LVR-D-525	Polished finish	525 x 334 x 97 mm

LVR-ECO-560

BEST SELLER

ECO WALL MOUNTED WASH BASIN

Rectangular shape wash basin. Made of 1mm thick stainless steel AISI-304 18/10 (1.4301). Stamped in one piece. Drain /waste hole of 1 ¼”.
Delivered without wall brackets and waste. Overflow overflow kit included.

Dimensions: 560 x 420 x 199 mm

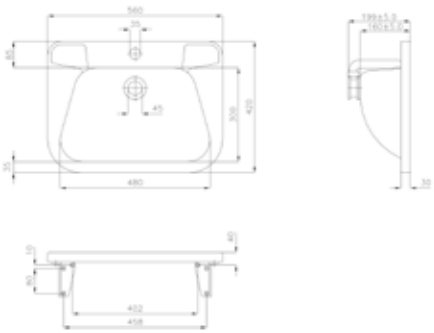

REFERENCE	FEATURES	DIMENSIONS
LVR-ECO-560	Polished finish	560 x 420 x 199 mm

PRODUCT IMAGE AND DRAWING

LVK-30

NEW

KEG WASH BASIN

Made of 1,5 mm thick stainless steel AISI-304 18/10 (1.4301). Ergonomic design for easy cleaning and mantainance. With saved plastics flusher.

* For surface mounting.

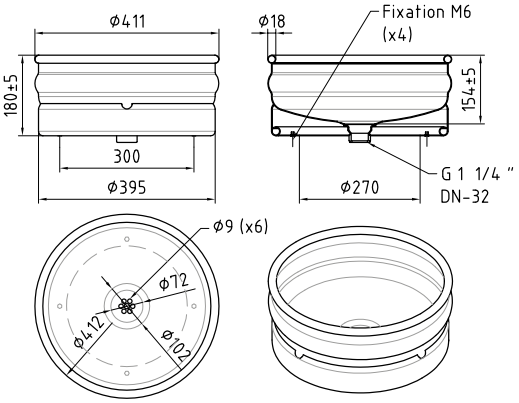

REFERENCE	FEATURES	DIMENSIONS
LVK 30	Pickled	Ø 395 x 145 mm

VETERANOS
ETERANOS.eu

PRODUCT IMAGE AND DRAWING

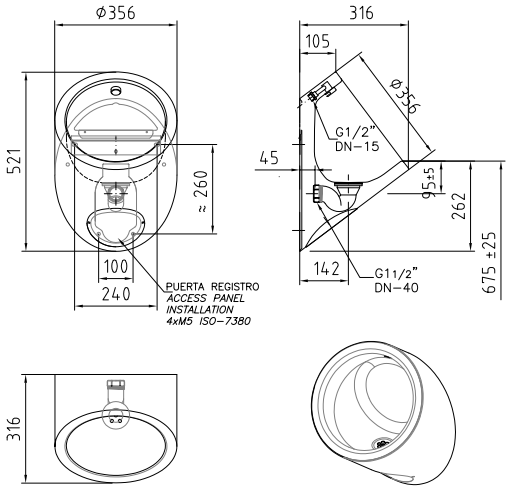

URC

ELECTRONICALLY OPERATED

WALL HUNG SINGLE URINAL

Round, wall hung urinal. Manufactured in stainless steel AISI-304 (1.4301). Supplied with spray nozzle of 1/2" gas thread. Access via service panel.
Top inlet (vertical) or back inlet (horizontal) both 1/2" gas thread (DN-15) flushing connection.
Supplied with P-trap valve of 11/2" (Ø 40mm.).

ELECTRONIC EQUIPMENT OPTIONS: THERMAL SENSOR
Thermal sensors KIT for urinal URC-S 24 V
Thermal sensors KIT for urinal URC-S 6V with batteries
Thermal sensors KIT for urinal URC-S 230 V with Power supply

***POLISH FINISH AVAILABLE ON REQUEST**

REFERENCE	FEATURES	DIMENSIONS
URC	Brushed finish	520x360x300 mm
URC-E-24V	Thermic sensor	520x360x300 mm
URC-E-4X6V	Thermic sensor - Batteries	520x360x300 mm
URC-E-230V	Thermic sensor - Power supply	520x360x300 mm

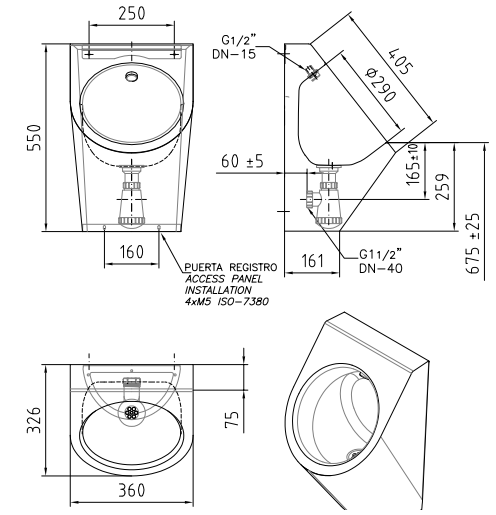

URB

ELECTRONICALLY OPERATED

WALL HUNG SINGLE URINAL

Rectangular, wall hung urinal made of 1mm thick stainless steel AISI-304 18/10 (1.4301).
Supplied with spray nozzle of ½" gas thread.
Top inlet (vertical) or back inlet (horizontal) both ½" gas thread (DN-15) flushing connection.
Supplied with valve 1½" (Ø 40mm.).

ELECTRONIC EQUIPMENT OPTIONS: THERMAL SENSOR
Thermal sensors KIT for urinal URC-S 24 V
Thermal sensors KIT for urinal URC-S 6V with batteries
Thermal sensors KIT for urinal URC-S 230 V with Power supply

ELECTRONIC EQUIPMENT OPTIONS: INFRARED SENSOR
KIT made of Stainless steel Infra-Red head 24 V
KIT made of tainless steel Infra-Red head 6V with batteries

***POLISH FINISH AVAILABLE ON REQUEST**

REFERENCE	FEATURES	DIMENSIONS
URB	Brushed finish	360x325x550 mm
URB-E-24V	Thermic sensor	360x325x550 mm
URB-E-4X6V	Thermic sensor - Batteries	360x325x550 mm
URB-E-230V	Thermic sensor - Power supply	360x325x550 mm
URC-EI-24V	Infra-Red sensor	360x325x550 mm
URC-EI-4X6V	Infra-Red sensor - Batteries	360x325x550 mm

PRODUCT IMAGE AND DRAWING

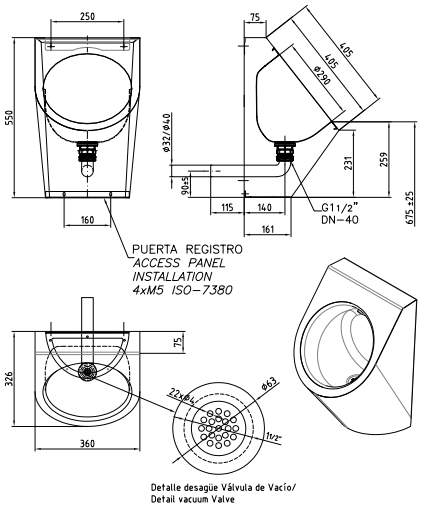

URB-FF

FLUSH FREE WALL HUNG SINGLE URINAL

Rectangular, wall hung urinal made of 1mm thick stainless steel AISI-304 18/10 (1.4301).
Top inlet (vertical) or back inlet (horizontal) both ½" gas thread (DN-15) flushing connection.
Supplied with valve 1½" (Ø 40mm.).

REFERENCE	FEATURES	DIMENSIONS
URB-FF-P	Polished finish	360x325x550 mm
URB-FF-S	Brushed finish	360x325x550 mm

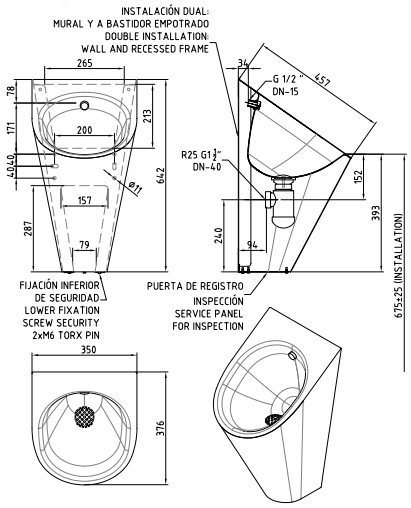

URF-700

ELECTRONICALLY OPERATED

NEW

WALL HUNG URINAL - OVAL SHAPED

Rectangular, wall hung urinal made of 1mm thick stainless steel AISI-304 18/10 (1.4301).
Supplied with spray head of ½" gas thread.
Thickness: Bowl 1mm and cover 1,5mm.
Inlet: back inlet (horizontal) both ½" gas thread (DN-15) flushing connection.

ELECTRONIC EQUIPMENT OPTIONS: THERMAL SENSOR
Thermal sensors KIT for urinal URC-S 24 V
Thermal sensors KIT for urinal URC-S 6V with batteries
Thermal sensors KIT for urinal URC-S 230 V with Power supply

ELECTRONIC EQUIPMENT OPTIONS: INFRARED SENSOR
KIT made of Stainless steel Infra-Red head 24 V
KIT made of tainless steel Infra-Red head 6V with batteries

REFERENCE	FEATURES	DIMENSIONS
URF-700	Brushed finish	390x700x340 mm
URF-E-24V	Thermic sensor	390x700x340 mm
URF-E-4X6V	Thermic sensor - Batteries	390x700x340 mm
URF-E-230V	Thermic sensor - Power supply	390x700x340 mm
URF-EI-24V	Infra-Red sensor	390x700x340 mm
URF-EI-4X6V	Infra-Red sensor - Batteries	390x700x340 mm

PRODUCT IMAGE AND DRAWING

URM

WALL MOUNTED TROUGH URINAL

Wall hung trough urinal made of stainless steel AISI-304 (1.4301), 1.5mm thick. Flushing through perforated stainless steel pipe.
Inlet: Top inlet (vertical) by ½" gas threads (DN-15) flushing connection.
Trap: Supplied with a flat outlet valve and trap of 1½" (Ø 40 mm.).

Option:
- Dividers available

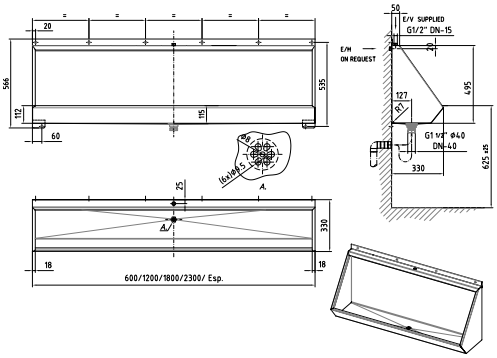

REFERENCE	FEATURES	DIMENSIONS
URM-1200	Suitable for 2 users	1200x330x566 mm
URM-1800	Suitable for 3 users	1800x330x566 mm
URM-2300	Suitable for 4 users	2300x330x566 mm
URM-1200-SEP	Suitable for 2 users	1200x429x911 mm
URM-1800-SEP	Suitable for 3 users	1800x429x911 mm
URM-2300-SEP	Suitable for 4 users	2300x429x911 mm

URE

RECESSED TROUGH URINAL

Wall hung trough urinal made of stainless steel AISI-304 (1.4301), 1.5mm thick.
Spray nozzles flushing. Inlet: Top inlet (vertical) by ½" gas threads (DN-15) flushing connection.
Trap: Supplied with a flat outlet valve and trap of 1½" (Ø 40 mm.).

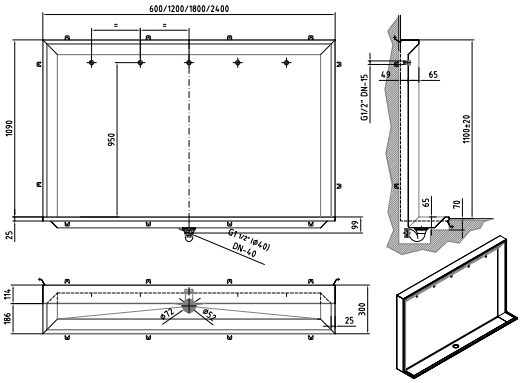

REFERENCE	FEATURES	DIMENSIONS
URE-600	Suitable for 1 user	600x300x1155 mm
URE-1200	Suitable for 2 users	1200x300x1155 mm
URE-1800	Suitable for 3 users	1800x300x1155 mm
URE-2400	Suitable for 4 users	2400x300x1155 mm

PRODUCT IMAGE AND DRAWING

URE-P

NEW

RECESSED TROUGH URINAL - BOTTOM ACCESS PANEL

Manufactured in stainless steel AISI-304 18/10 (1.4301) of 1,2m thick. Supplied with spray nozzles and dividers.

- BACK INLET
- ACCES PANEL TO FACILITATE INSTALATION

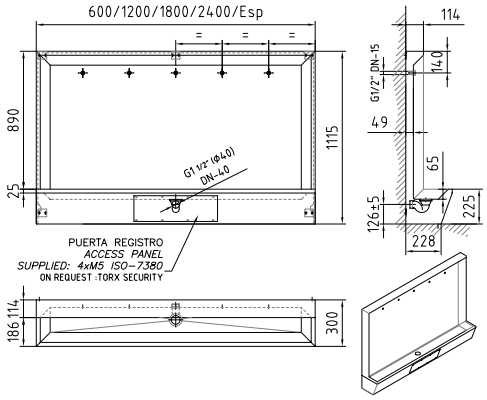

REFERENCE	FEATURES	DIMENSIONS
URE-1200-P	Suitable for 2 users	1200x300x1115 mm
URE-1800-P	Suitable for 3 users	1800x300x1115 mm
URE-2400-P	Suitable for 4 users	2400x300x1115 mm

URE-P-SEP

NEW

RECESSED TROUGH URINAL WITH DIVIDERS - BOTTOM ACCESSS PANEL

Manufactured in stainless steel AISI-304 18/10 (1.4301) of 1,2m thick. Supplied with spray nozzles and dividers

- URINAL DIVIDERS INCLUDED
- BACK INLET
- ACCES PANEL TO FACILITATE INSTALATION

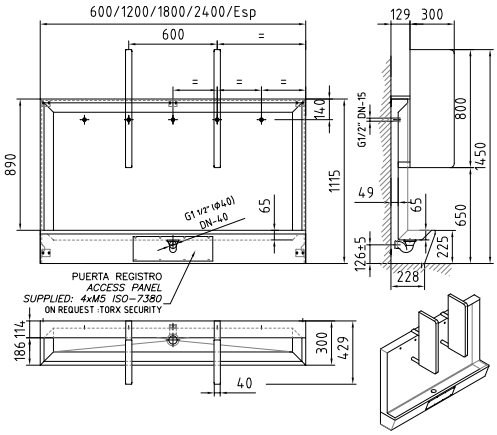

REFERENCE	FEATURES	DIMENSIONS
URE-1200-P- SEP	Suitable for 2 users	1200x300x1115 mm
URE-1800-P- SEP	Suitable for 3 users	1800x300x1115 mm
URE-2400-P- SEP	Suitable for 4 users	2400x300x1115 mm

PRODUCT IMAGE AND DRAWING

URE-SEP

NEW

RECESSED TROUGH URINAL WITH DIVIDERS

Manufactured in stainless steel AISI-304 18/10 (1.4301) of 1,2m thick. Supplied with spray nozzles and dividers

BACK INLET

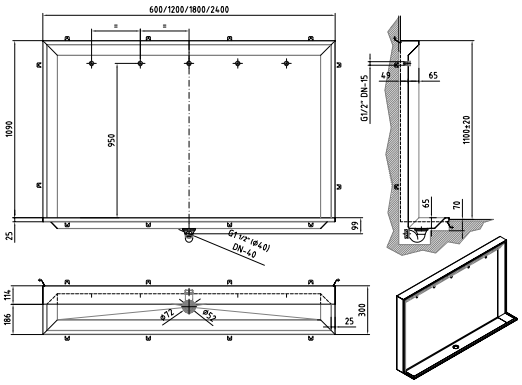

REFERENCE	FEATURES	DIMENSIONS
URE-1200-SEP	Suitable for 2 users	1200x300x1115 mm
URE-1800-SEP	Suitable for 3 users	1800x300x1115 mm
URE-2400-SEP	Suitable for 4 users	2400x300x1115 mm

URC-SEP

URINAL DIVIDER

Urinal divider manufactured in 1.5mm thick stainless steel AISI-304 (1.4301). Concealed fixing for vandal resistance.
Recommended installation height: 390 mm from floor to the lower edge.

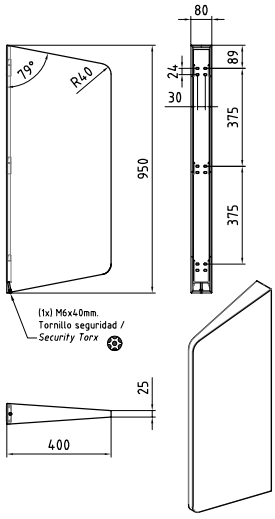

REFERENCE	FEATURES	DIMENSIONS
URC-SEP-P	Polished finish	80x400x950 mm
URC-SEP-S	Brushed finish	80x400x950 mm

PRODUCT IMAGE AND DRAWING

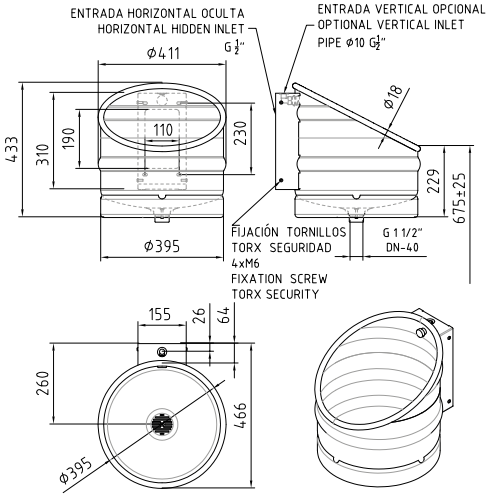

URK 50

NEW

KEG URINAL

Made of 1,5 mm thick stainless steel AISI-304 18/10 (1.4301). Back plate for easy installation.
Authencic pub feel.

REFERENCE	FEATURES	DIMENSIONS
URK 50	Sandblasting finish	Ø 395 x 430 mm

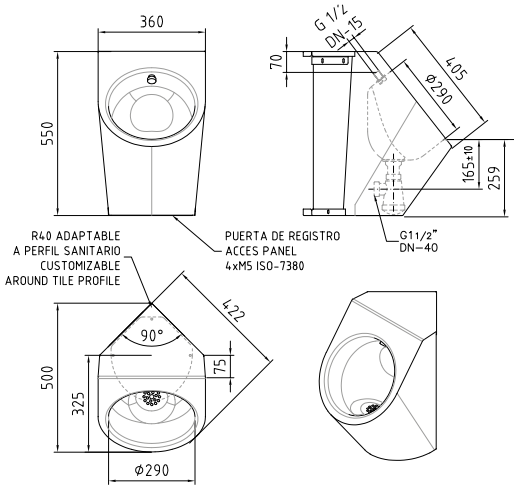

URB-A

NEW

CORNER URINAL BOWL - SUPPLIED WITH SERVICE DOOR

Corner wall hung urinal made of 1mm thick stainless steel AISI-304 18/10 (1.4301). Supplied with spray head of ½" gas thread.

Thickness: Bowl 1mm and cover 1,5mm.
Inlet: Top inlet (vertical) or back inlet (horizontal) both ½" gas thread (DN-15) flushing connection.

REFERENCE	FEATURES	DIMENSIONS
URB-A	Sandblasting finish	360x500x550 mm

PRODUCT IMAGE AND DRAWING

INP-535-OVD

FLOOR STANDING WC PAN

Conical floor standing WC pan made of stainless steel AISI-304 (1.4301). One-piece toilet bowl. Approved and certified in compliance with the European Standard EN-997 (flush volume 4 or 6 litres).
Splash proof toilet bowl. Back to wall mounting on a fixing plate (supplied with the toilet).
Optional: Wood or Black toilet seat.
Filled with expanded polyurethane foam for sound deadening and to prevent bumps and dents.

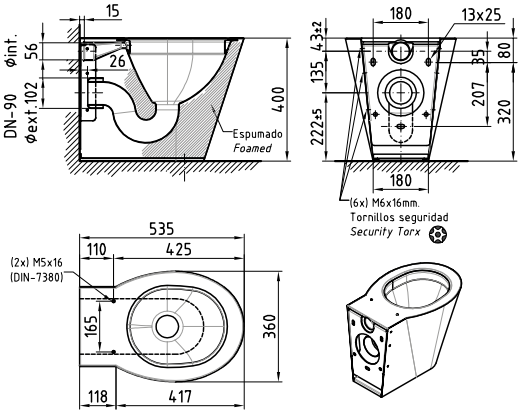

REFERENCE	FEATURES	DIMENSIONS
INP-535-OVD-P	Polished finish	360x535x400 mm
INP-535-OVD-S	Brushed finish	360x535x400 mm

INP-655-OVD-PR

FLOOR STANDING WC PAN

Conical floor standing WC pan made of stainless steel AISI-304 (1.4301). One-piece toilet bowl. Approved and certified in compliance with the European Standard EN-997 (flush volume 4 or 6 litres).
Splash proof toilet bowl. Back to wall mounting on a fixing plate (supplied with the toilet).
Optional: Wood or Black toilet seat.
Filled with expanded polyurethane foam for sound deadening and to prevent bumps and dents.

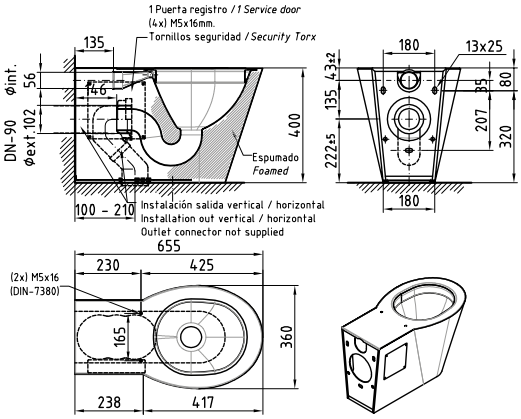

REFERENCE	FEATURES	DIMENSIONS
INP-655-OVD-PR-P	Polished finish	360x655x400 mm
INP-655-OVD-PR-S	Brushed finish	360x655x400 mm

PRODUCT IMAGE AND DRAWING

INP-700-OVD-PR

FLOOR STANDING WC PAN

Conical floor standing WC pan made of stainless steel AISI-304 (1.4301). One-piece toilet bowl. Approved and certified in compliance with the European Standard EN-997 (flush volume 4 or 6 litres).
Splash proof toilet bowl. Back to wall mounting on a fixing plate (supplied with the toilet).
Optional: Wood or Black toilet seat.
Filled with expanded polyurethane foam for sound deadening and to prevent bumps and dents.

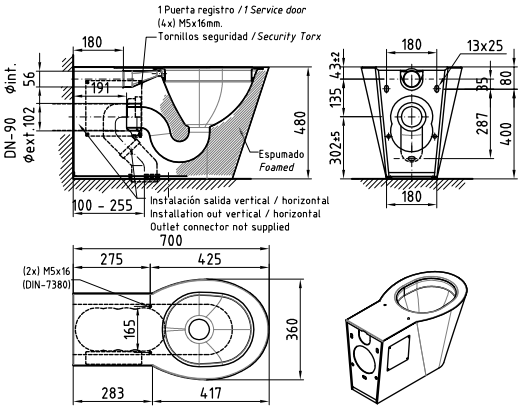

REFERENCE	FEATURES	DIMENSIONS
INP-700-OVD-PR-P	Polished finish	360x700x480 mm
INP-700-OVD-PR-S	Brushed finish	360x700x480 mm

INS-535-OVD

WALL MOUNTED WC PAN

Conical wall mounted WC pan made of stainless steel AISI-304 (1.4301). One-piece toilet bowl. Approved and certified in compliance with the European Standard EN-997 (flush volume 4 or 6 litres).
Splash proof toilet bowl. Back to wall mounting on a fixing plate (supplied with the toilet)..
Optional: Wood or Black toilet seat.
Filled with expanded polyurethane foam for sound deadening and to prevent bumps and dents.

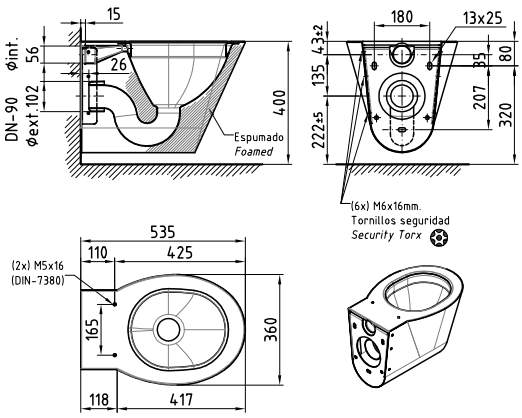

REFERENCE	FEATURES	DIMENSIONS
INS-535-OVD-P	Polished finish	360x535x360 mm
INS-535-OVD-S	Brushed finish	360x535x360 mm

PRODUCT IMAGE AND DRAWING

INS-655-OVD-PR

WALL MOUNTED WC PAN

Conical wall mounted WC pan made of stainless steel AISI-304 (1.4301). One-piece toilet bowl. Approved and certified in compliance with the European Standard EN-997 (flush volume 4 or 6 litres).
Splash proof toilet bowl. Back to wall mounting on a fixing plate (supplied with the toilet)..
Optional: Wood or Black toilet seat.
Filled with expanded polyurethane foam for sound deadening and to prevent bumps and dents.

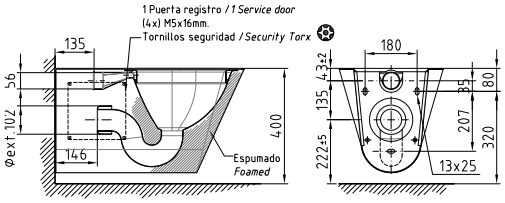

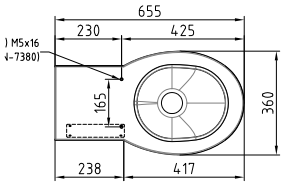

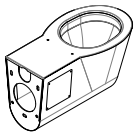

REFERENCE	FEATURES	DIMENSIONS
INS-655-OVD-PR-P	Polished finish	360x655x360 mm
INS-655-OVD-PR-S	Brushed finish	360x655x360 mm

INS-700-OVD

WALL MOUNTED WC PAN

Conical wall mounted WC pan made of stainless steel AISI-304 (1.4301). One-piece toilet bowl. Approved and certified in compliance with the European Standard EN-997 (flush volume 4 or 6 litres).
Splash proof toilet bowl. Back to wall mounting on a fixing plate (supplied with the toilet)..
Optional: Wood or Black toilet seat.
Filled with expanded polyurethane foam for sound deadening and to prevent bumps and dents.

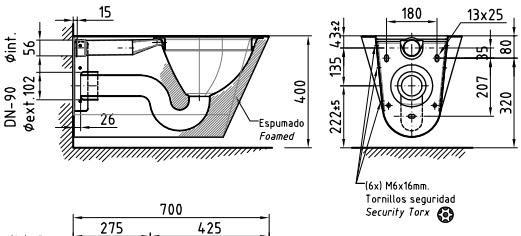

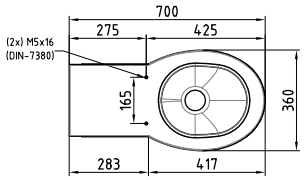

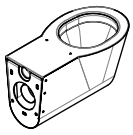

REFERENCE	FEATURES	DIMENSIONS
INS-700-OVD-P	Polished finish	360x700x360 mm
INS-700-OVD-S	Brushed finish	360x700x360 mm

PRODUCT IMAGE AND DRAWING

INP-655-OVD-TB-PR

FLOOR STANDING WC PAN

Conical floor standing WC pan with tank made of stainless steel AISI- 304 (1.4301). One-piece toilet bowl. Approved and certified in compliance with the European Standard EN-997 (flush volume 4 or 6 litres).
Splash proof toilet bowl. Back to wall mounting on a fixing plate (supplied with the toilet).
Optional: Wood or Black toilet seat.
Filled with expanded polyurethane foam for sound deadening and to prevent bumps and dents.

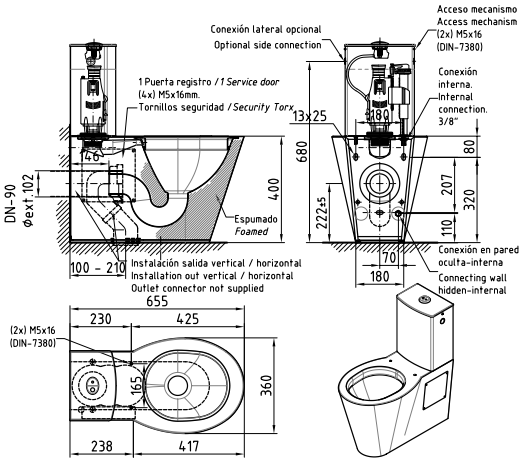

REFERENCE	FEATURES	DIMENSIONS
INP-655-OVD-TB-PR-P	Polished finish	360x655x745 mm
INP-655-OVD-TB-PR-S	Brushed finish	360x655x745 mm

INP-700-OVD-TB-PR

FLOOR STANDING WC PAN

Conical floor standing WC pan with tank made of stainless steel AISI- 304 (1.4301). One-piece toilet bowl. Approved and certified in compliance with the European Standard EN-997 (flush volume 4 or 6 litres).
Splash proof toilet bowl. Back to wall mounting on a fixing plate (supplied with the toilet).
Optional: Wood or Black toilet seat.
Filled with expanded polyurethane foam for sound deadening and to prevent bumps and dents.

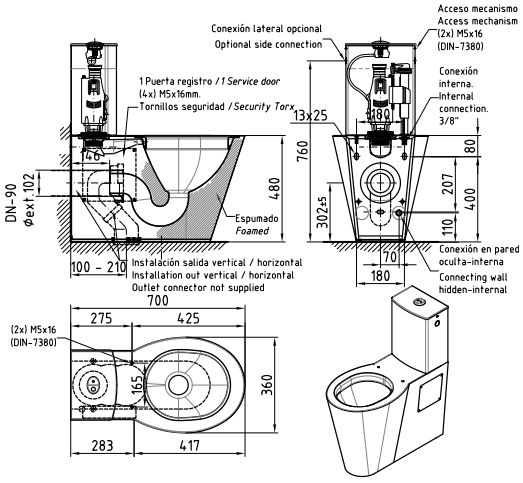

REFERENCE	FEATURES	DIMENSIONS
INP-700-OVD-TB-PR-P	Polished finish	360x700x825 mm
INP-700-OVD-TB-PR-S	Brushed finish	360x700x825 mm

PRODUCT IMAGE AND DRAWING

INS-655-OVD-TB-PR

WALL MOUNTED WC PAN

Conical wall mounted WC pan with tank made of stainless steel AISI- 304 (1.4301). One-piece toilet bowl. Approved and certified in compliance with the European Standard EN-997 (flush volume 4 or 6 litres).
Splash proof toilet bowl. Back to wall mounting on a fixing plate (supplied with the toilet).
Optional: Wood or Black toilet seat.
Filled with expanded polyurethane foam for sound deadening and to prevent bumps and dents.

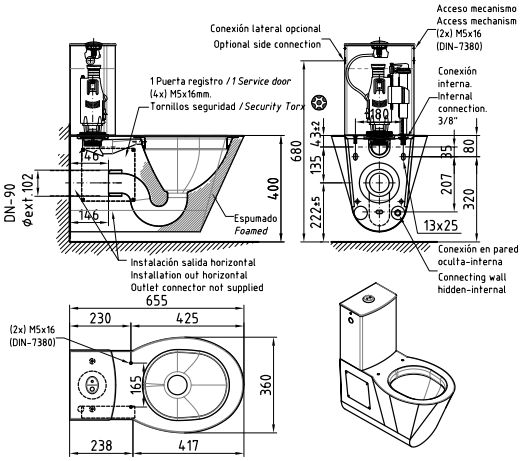

REFERENCE	FEATURES	DIMENSIONS
INS-655-OVD-TB-PR-P	Polished finish	360x655x705 mm
INS-655-OVD-TB-PR-S	Brushed finish	360x655x705 mm

INS-700-OVD-TB-PR

WALL MOUNTED WC PAN

Conical wall mounted WC pan with tank made of stainless steel AISI- 304 (1.4301). One-piece toilet bowl. Approved and certified in compliance with the European Standard EN-997 (flush volume 4 or 6 litres).
Splash proof toilet bowl. Back to wall mounting on a fixing plate (supplied with the toilet).
Optional: Wood or Black toilet seat.
Filled with expanded polyurethane foam for sound deadening and to prevent bumps and dents.

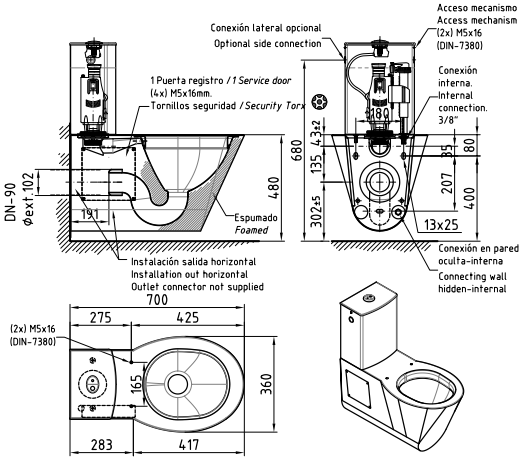

REFERENCE	FEATURES	DIMENSIONS
INS-700-OVD-TB-PR-P	Polished finish	360x700x705mm
INS-700-OVD-TB-PR-S	Brushed finish	360x700x705 mm

PRODUCT IMAGE AND DRAWING

DM-OVD

TOILET SEAT

Toilet seat, specially designed for our stainless steel WC pans. Hinges made of stainless steel AISI-304.
Supplied with security Torx screws (DIN 965).

REFERENCE	FEATURES	DIMENSIONS
DM-OVD-B	Black Color. Suitable for all OVD WC Pans	357X425 mm
DM-OVD-W	Wooden Color. Suitable for all OVD WC Pans	357X425 mm

INP-535-OVC

FLOOR STANDING WC PAN

Conical floor standing WC pan made of stainless steel AISI-304 (1.4301). One-piece toilet bowl. Approved and certified in compliance with the European Standard EN-997 (flush volume 4 or 6 litres).
Splash proof toilet bowl.
Back to wall mounting on a fixing plate (supplied with the toilet).Optional: Wood or Black toilet seat.
Filled with expanded polyurethane foam for sound deadening and to prevent bumps and dents.

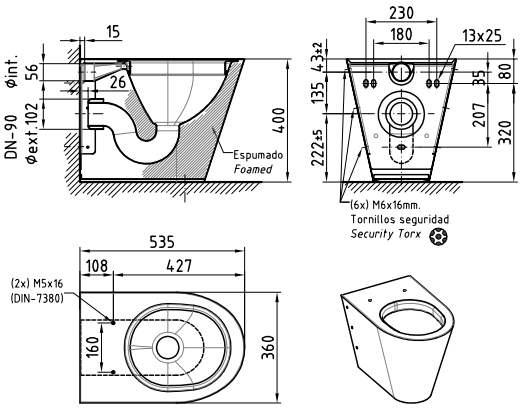

REFERENCE	FEATURES	DIMENSIONS
INP-535-OVC-P	Polished finish	360x535x400 mm
INP-535-OVC-S	Brushed finish	360x535x400 mm

PRODUCT IMAGE AND DRAWING

INP-655-OVC-PR

FLOOR STANDING WC PAN

Conical floor standing WC pan made of stainless steel AISI-304 (1.4301). One-piece toilet bowl. Approved and certified in compliance with the European Standard EN-997 (flush volume 4 or 6 litres).
Splash proof toilet bowl.
Back to wall mounting on a fixing plate (supplied with the toilet). Optional: Wood or Black toilet seat.
Filled with expanded polyurethane foam for sound deadening and to prevent bumps and dents.

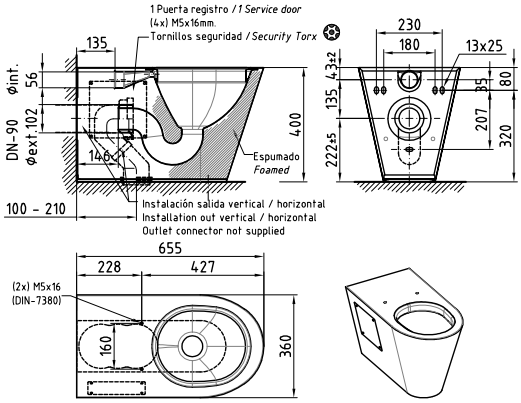

REFERENCE	FEATURES	DIMENSIONS
INP-655-OVC-PR-P	Polished finish	360x655x400 mm
INP-655-OVC-PR-S	Brushed finish	360x655x400 mm

INP-700-OVC-PR

FLOOR STANDING WC PAN

Conical floor standing WC pan made of stainless steel AISI-304 (1.4301). One-piece toilet bowl. Approved and certified in compliance with the European Standard EN-997 (flush volume 4 or 6 litres).
Splash proof toilet bowl.
Back to wall mounting on a fixing plate (supplied with the toilet). Optional: Wood or Black toilet seat.
Filled with expanded polyurethane foam for sound deadening and to prevent bumps and dents.

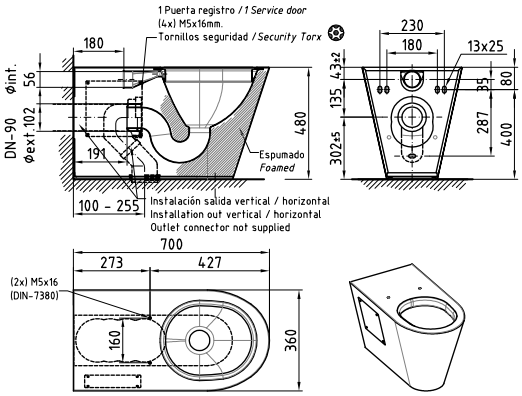

REFERENCE	FEATURES	DIMENSIONS
INP-700-OVC-PR-P	Polished finish	360x700x480 mm
INP-700-OVC-PR-S	Brushed finish	360x700x480 mm

PRODUCT IMAGE AND DRAWING

INS-535-OVC

WALL MOUNTED WC PAN

Conical wall mounted WC pan made of stainless steel AISI-304 (1.4301). One-piece toilet bowl. Approved and certified in compliance with the European Standard EN-997 (flush volume 4 or 6 litres).
Splash proof toilet bowl. Back to wall mounting on a fixing plate (supplied with the toilet).
Optional: Wood or Black toilet seat.
Filled with expanded polyurethane foam for sound deadening and to prevent bumps and dents.

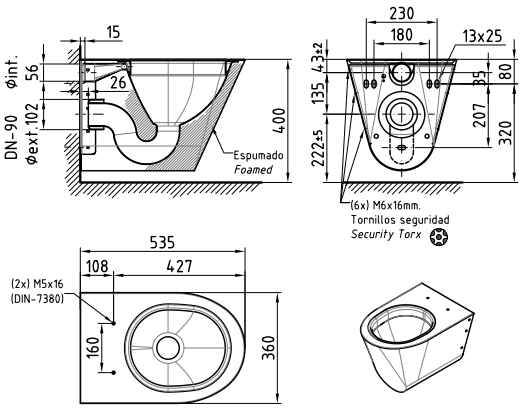

REFERENCE	FEATURES	DIMENSIONS
INS-535-OVC-P	Polished finish	360x535x360 mm
INS-535-OVC-S	Brushed finish	360x535x360 mm

INS-655-OVC-PR

WALL MOUNTED WC PAN

Conical wall mounted WC pan made of stainless steel AISI-304 (1.4301). One-piece toilet bowl. Approved and certified in compliance with the European Standard EN-997 (flush volume 4 or 6 litres).
Splash proof toilet bowl. Back to wall mounting on a fixing plate (supplied with the toilet).
Optional: Wood or Black toilet seat.
Filled with expanded polyurethane foam for sound deadening and to prevent bumps and dents.

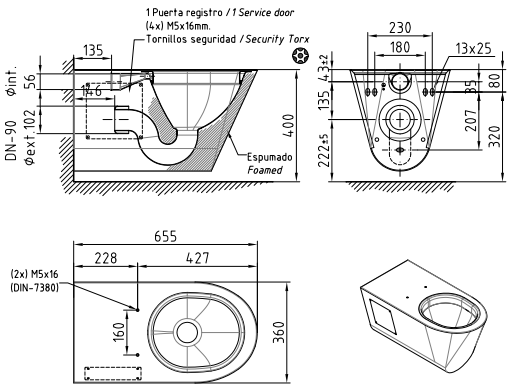

REFERENCE	FEATURES	DIMENSIONS
INS-655-OVC-PR-P	Polished finish	360x655x360 mm
INS-655-OVC-PR-S	Brushed finish	360x655x360 mm

PRODUCT IMAGE AND DRAWING

INS-700-OVC

WALL MOUNTED WC PAN

Conical wall mounted WC pan made of stainless steel AISI-304 (1.4301). One-piece toilet bowl. Approved and certified in compliance with the European Standard EN-997 (flush volume 4 or 6 litres).
Splash proof toilet bowl. Back to wall mounting on a fixing plate (supplied with the toilet).
Optional: Wood or Black toilet seat.
Filled with expanded polyurethane foam for sound deadening and to prevent bumps and dents.

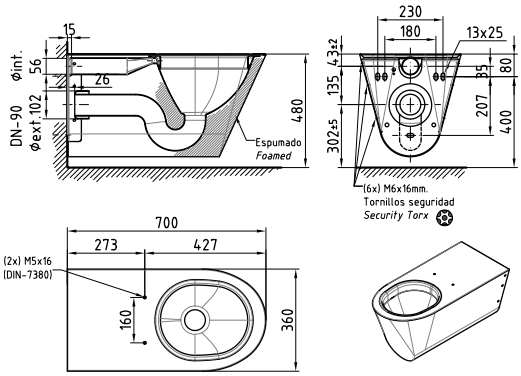

REFERENCE	FEATURES	DIMENSIONS
INS-700-OVC-P	Polished finish	360x700x360 mm
INS-700-OVC-S	Brushed finish	360x700x360 mm

INP-655-OVC-TB-PR

FLOOR STANDING WC PAN

Conical floor standing WC pan with tank made of stainless steel AISI- 304 (1.4301). One-piece toilet bowl. Approved and certified in compliance with the European Standard EN-997 (flush volume 4 or 6 litres).
Splash proof toilet bowl. Back to wall mounting on a fixing plate (supplied with the toilet).
Optional: Wood or Black toilet seat.
Filled with expanded polyurethane foam for sound deadening and to prevent bumps and dents.

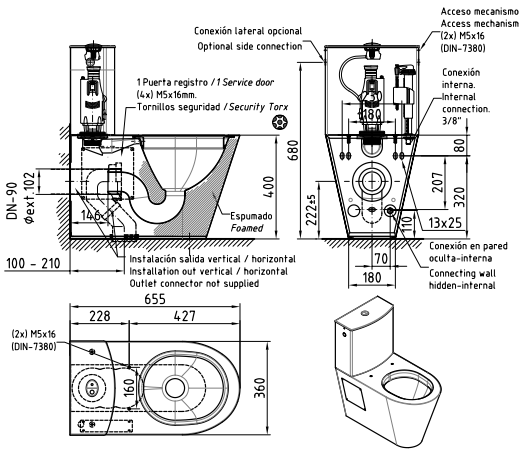

REFERENCE	FEATURES	DIMENSIONS
INP-655-OVC-TB-PR-P	Polished finish	360x655x745 mm
INP-655-OVC-TB-PR-S	Brushed finish	360x655x745 mm

PRODUCT IMAGE AND DRAWING

INP-700-OVC-TB-PR

FLOOR STANDING WC PAN

Conical floor standing WC pan with tank made of stainless steel AISI- 304 (1.4301). One-piece toilet bowl. Approved and certified in compliance with the European Standard EN-997 (flush volume 4 or 6 litres).
Splash proof toilet bowl. Back to wall mounting on a fixing plate (supplied with the toilet).
Optional: Wood or Black toilet seat.
Filled with expanded polyurethane foam for sound deadening and to prevent bumps and dents.

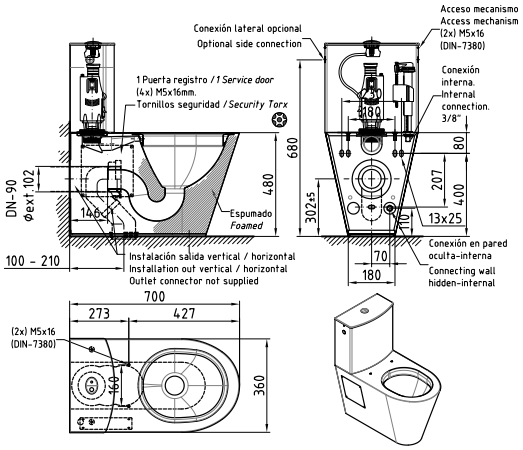

REFERENCE	FEATURES	DIMENSIONS
INP-700-OVC-TB-PR-P	Polished finish	360x700x825 mm
INP-700-OVC-TB-PR-S	Brushed finish	360x700x825 mm

INS-655-OVC-TB-PR

WALL MOUNTED WC PAN

Conical wall mounted WC pan with tank made of stainless steel AISI- 304 (1.4301). One-piece toilet bowl. Approved and certified in compliance with the European Standard EN-997 (flush volume 4 or 6 litres).
Splash proof toilet bowl. Back to wall mounting on a fixing plate (supplied with the toilet).
Optional: Beech wood or Black toilet seat.
Filled with expanded polyurethane foam for sound deadening and to prevent bumps and dents..

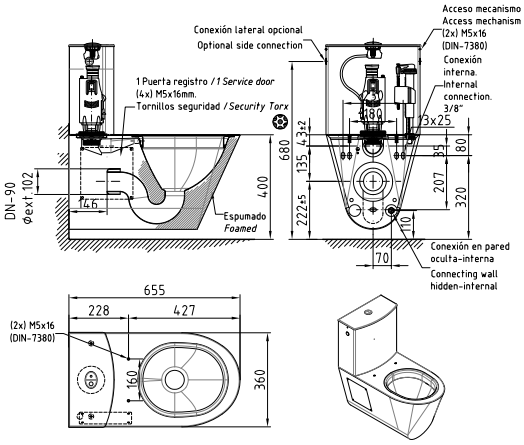

REFERENCE	FEATURES	DIMENSIONS
INS-655-OVC-TB-PR-P	Polished finish	360x655x707/745 mm
INS-655-OVC-TB-PR-S	Brushed finish	360x655x707/745 mm

PRODUCT IMAGE AND DRAWING

DM-OVC

TOILET SEAT

Toilet seat, specially designed for our stainless steel WC pans. Hinges made of stainless steel AISI-304.
Supplied with security Torx screws (DIN 965). Beech wood model available.

REFERENCE	FEATURES	DIMENSIONS
DM-OVC-B	Black Color	355X440 mm
DM-OVC-W	Wooden Color	355X440 mm

INP-580-REC-PR

FLOOR STANDING WC PAN

Conical floor standing WC pan made of stainless steel AISI-304 (1.4301).
Round shaped toilet bowl.
Filled with expanded polyurethane foam for sound deadening and to prevent bumps and dents..
Splash proof toilet bowl. Supplied with access panel.

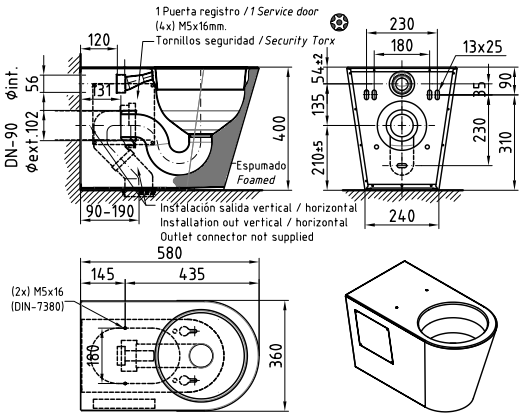

REFERENCE	FEATURES	DIMENSIONS
INP-580-REC-PR-P	Polished finish	360x580x400 mm
INP-580-REC-PR-S	Brushed finish	360x580x400 mm

PRODUCT IMAGE AND DRAWING

INP-655-REC-TB-PR

FLOOR STANDING WC PAN

Conical floor standing WC pan with tank.
Round shaped toilet bowl.
Filled with expanded polyurethane foam for sound deadening and to prevent bumps and dents..
Splash proof toilet bowl.
Supplied with access panel.

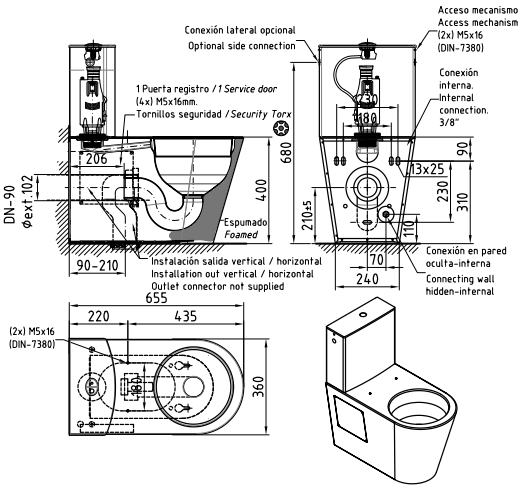

REFERENCE	FEATURES	DIMENSIONS
INP-655-REC-TB-PR-P	Polished finish	360x655x750 mm
INP-655-REC-TB-PR-S	Brushed finish	360x655x750 mm

INS-535-REC-PR

WALL MOUNTED WC PAN

Stamped round WC bowl. 1,5mm thickness.
Filled with expanded polyurethane foam for sound deadening and to prevent bumps and dents..
Splash proof toilet bowl.
Outlet: Stainless steel P-Trap Ø 100 mm.

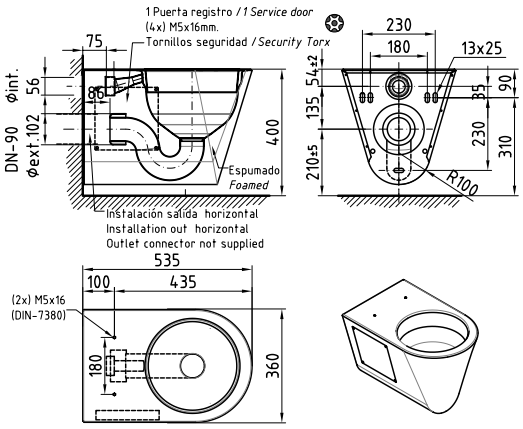

REFERENCE	FEATURES	DIMENSIONS
INS-535-REC-PR-P	Polished finish	360x535x362/400 mm
INS-535-REC-PR-S	Brushed finish	360x535x362/400 mm

PRODUCT IMAGE AND DRAWING

DM-REC

TOILET SEAT

Toilet seat, specially designed for our stainless steel WC pans.
Hinges made of stainless steel AISI-304.
Supplied with security Torx screws (DIN 965).

REFERENCE	FEATURES	DIMENSIONS
DM-REC-B	Black Color	364X440 mm
DM-REC-W	Wooden Color	3645X440 mm

PT

SQUATTING PAN

Stamped squatting pan made of 1.5mm thick stainless steel AISI-304 (1.4301). Satin finish. Foot holder with non-slippery surface. For recessed or on top mounting. Supplied with two stainless steel AISI-304 (1.4301) 1/2” gas thread spray nozzles. Straight outlet of Ø 100mm.

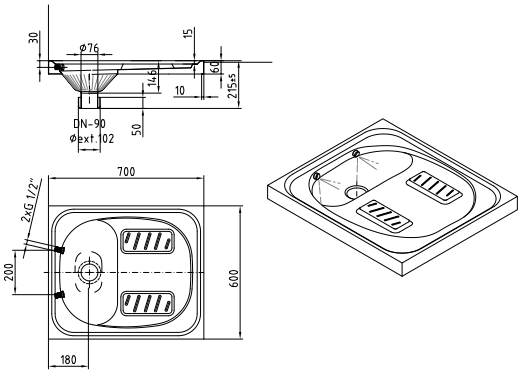

REFERENCE	FEATURES	DIMENSIONS
PT-S	Brushed finish	600x700x215 mm

PRODUCT IMAGE AND DRAWING

PD-700

SHOWER TRAY

Shower tray made of 1mm thick stainless steel AISI-304 (1.4301).
Manufactured in one piece without joints.
For recessed or surface mounting.

Surface: Brushed finish.
With non-slippery flooring.
Supplied with PVC drain valve.

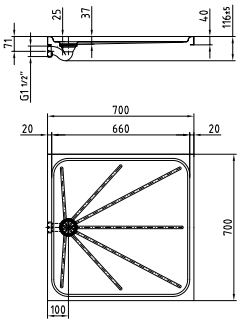

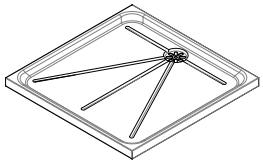

REFERENCE	FEATURES	DIMENSIONS
PD-700		700x700x65 mm

PDN-800

SHOWER TRAY

Shower tray made of 1mm thick stainless steel AISI-304 (1.4301).
Manufactured in just one piece.
For recessed or surface mounting.

Surface: Brushed finish.
With non-slippery flooring.
Supplied with PVC drain valve.

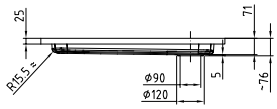

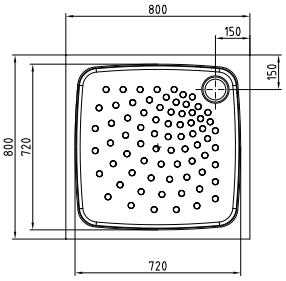

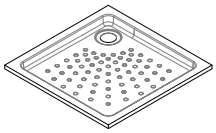

REFERENCE	FEATURES	DIMENSIONS
PDN-800		800x800x80 mm

PRODUCT IMAGE AND DRAWING

PDH-900

SHOWER TRAY

Shower tray made of 1mm thick stainless steel AISI-304 (1.4301).
For recessed or surface mounting.

Surface: Brushed finish.
With non-slippery flooring.
Supplied with PVC drain valve.

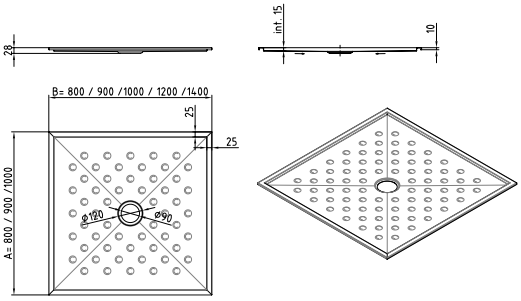

REFERENCE	FEATURES	DIMENSIONS
PDH-900		900x900x25 mm

PDH-1000

SHOWER TRAY

Shower tray made of 1mm thick stainless steel AISI-304 (1.4301).
For recessed or surface mounting.

Surface: Brushed finish.
With non-slippery flooring.
Supplied with PVC drain valve.

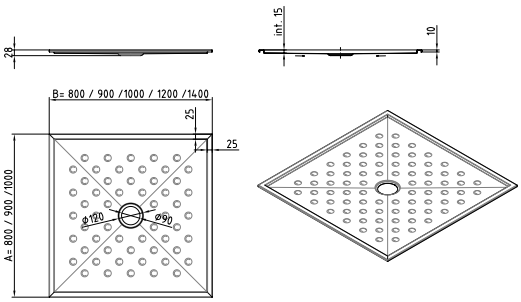

REFERENCE	FEATURES	DIMENSIONS
PDH-1000		1000x1000x25 mm

PRODUCT IMAGE AND DRAWING

LVM

HAND WASH BASIN

Wall mounted and knee operated wash basin. Full compliance with current European legislation. Fully made of stainless steel AISI-304 (1.4301). Pressed bowl with work top and overflow hole.

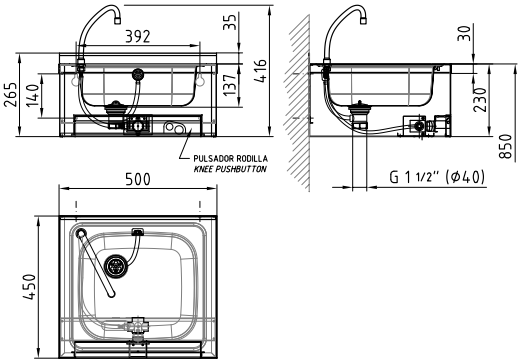

REFERENCE	FEATURES	DIMENSIONS
LVM-040	Tap with one water inlet	500x450x265 mm
LVM-040-D	Tap with one water inlet + soap dispenser	500x450x265 mm
LVM-041	With thermostatic valve	500x450x265 mm
LVM-041-D	With thermostatic valve + soap dispenser	500x450x265 mm
LVM-042	Electronic control	500x450x265 mm
LVM-042-D	Electronic control + soap dispenser	500x450x265 mm

LVP

HAND WASH BASIN

Floor standing, foot operated wash basin. It fully complies with the current European legislation. Fully made of stainless steel AISI-304 (1.4301). Pressed bowl with work top and overflow hole.

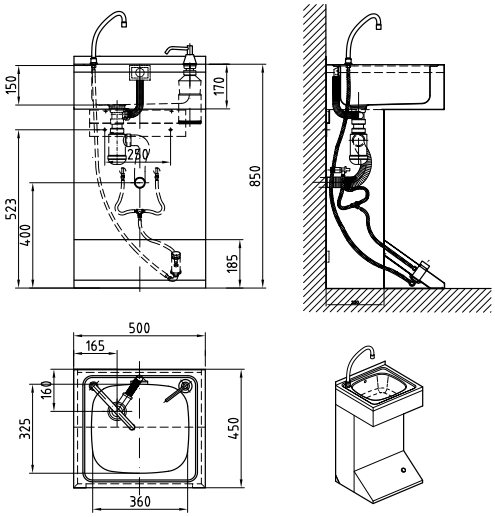

REFERENCE	FEATURES	DIMENSIONS
LVP-040	Tap with one water inlet	500x450x850 mm
LVP-040-D	Tap with one water inlet + soap dispenser	500x450x850 mm
LVP-041	With thermostatic valve	500x450x850 mm
LVP-041-D	With thermostatic valve + soap dispenser	500x450x850 mm
LVP-042	Electronic control	500x450x850 mm
LVP-042-D	Electronic control + soap dispenser	500x450x850 mm

PRODUCT IMAGE AND DRAWING

US-IN-560

BEST SELLER

UTILITY SINK

Wall mounted utility sink with backsplash. It is fully made of stainless steel AISI-304 (1.4301).
Pressed bowl. Surface satin finished.
Supplied with stainless steel wall panel, supporting bracket and 3 1/2” x 2” grated waste, and reducer from 2” - 1 1/2”.

Bowl size: 500 x 400 x 190 mm
Dimensions: 560 x 450 x 385 mm

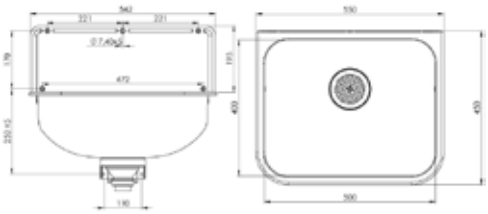

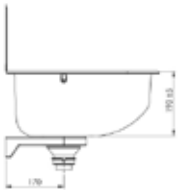

REFERENCE	FEATURES	DIMENSIONS
US-IN-560	Satin finished	560x450x385 mm

US-IN-555

BEST SELLER

UTILITY SINK

Wall mounted utility sink with backsplash. It is fully made of stainless steel AISI-304 (1.4301).
Pressed bowl. Surface satin finished.

Bowl size:500 x 400 x 230 mm
Dimensions: 555 x 480 x 230 mm

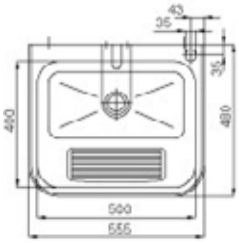

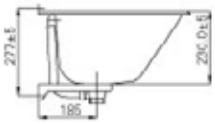

REFERENCE	FEATURES	DIMENSIONS
US-IN-555	Satin finished	555x480x230 mm

PRODUCT IMAGE AND DRAWING

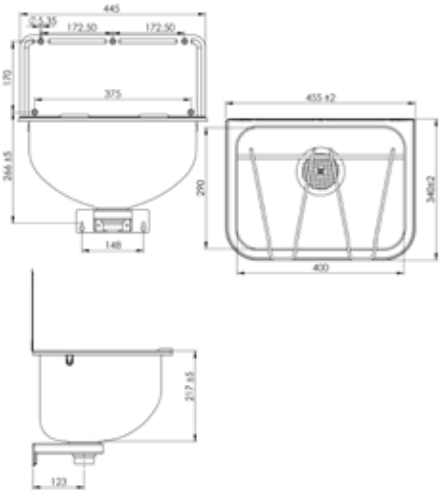

US-IN-455-G

BEST SELLER

UTILITY SINK

Wall mounted utility sink with backsplash. It is fully made of stainless steel AISI-304 (1.4301).
Pressed bowl. Surface satin finished.
Supplied with wall panel, Ø100mm grated waste and a bucket grid. Waste and wall bracket included.

Bowl size: 400 x 290 x 217 mm
Dimensions: 455 x 340 x 412 mm

REFERENCE	FEATURES	DIMENSIONS
US-IN-455-G	Satin finished	455x340x412 mm

PRODUCT IMAGE

SM-001

HAND DRYER

Hand dryer made of stainless steel AISI-304 (1.4301) for wall installation.
Surface finish: Satin or polished.
Homologations: CE. 73/23 CEE + 93/68/CEE + 83/336/CEE + 92/31/CEE

REFERENCE	FEATURES	DIMENSIONS
SM-001	With Push Button	280x250x203 mm

SM-002

HAND DRYER

Hand dryer made of stainless steel AISI-304 (1.4301) for wall installation.
Surface finish: Satin or polished.
Homologations: CE. 73/23 CEE + 93/68/CEE + 83/336/CEE + 92/31/CEE

REFERENCE	FEATURES	DIMENSIONS
SM-002	With Sensor Activation	280x250x203 mm

DT-001

TOWEL DISPENSER

Surface mounted paper towel dispenser.
Made of stainless steel AISI-304 (1.4301).

REFERENCE	FEATURES	DIMENSIONS
DT-001		260x120x275 mm

DP-001

SOAP DISPENSER

Vertical soap dispenser made of stainless steel AISI-304 specially indicated for soaps, lotion, and detergents. Surface finish: Polish or brushed. Unbreakable polycarbonate window for level indicator. Security key. Non corroding valve dispenses. Surface mounted.

REFERENCE	FEATURES	DIMENSIONS
DP-001	Capacity: 1.200 ml.	68x118x206 mm

DP-002

SOAP DISPENSER

Horizontal soap dispenser made of stainless steel AISI-304 specially indicated for soaps, lotion, and detergents. Surface finish: Polish or brushed. Unbreakable polycarbonate window for level indicator.Security key. Non corroding valve dispenses. Surface mounted.

REFERENCE	FEATURES	DIMENSIONS
DP-002	Capacity: 1.200 ml.	118x68x206 mm

PRODUCT IMAGE

DP-003

SOAP DISPENSER

Liquid soap dispenser. Made of stainless steel. Surface: High polished finish. Soap level indicator. Security key. Surface mounted.

REFERENCE	FEATURES	DIMENSIONS
DP-003	Capacity: 300 ml.	79x150x150 mm

DP-004

SOAP DISPENSER

Recessed liquid soap dispenser. Dispenser valve (piston & spout) made of stainless steel AISI-304 (1.4301) and bottle cylinder made of chromium plated brass. Security key.

REFERENCE	FEATURES	DIMENSIONS
DP-004	Capacity: 500 ml.	

PRP-001

TOILET ROLL TISSUE HOLDER

Toilet roll tissue holder for two rolls. Made of stainless steel AISI-304 (1.4301). Key lockable. Surface: Satin finish.

REFERENCE	FEATURES	DIMENSIONS
PRP-001	Surface mounted	268x143x87 mm

PRP-001E

TOILET ROLL TISSUE HOLDER

Toilet roll tissue holder for two rolls. Made of stainless steel AISI-304 (1.4301). Key lockable. Surface: Satin finish.

REFERENCE	FEATURES	DIMENSIONS
PRP-001E	Concealed	195x87x325 mm

PRP-002

TOILET ROLL TISSUE HOLDER

Toilet roll tissue holder. Surface mounted. Made of stainless steel AISI-304 (1.4301). Polished or brushed finish. Different models available.

REFERENCE	FEATURES	DIMENSIONS
PRP-002		150x131x68 mm

PRODUCT IMAGE

PRP-003

TOILET ROLL TISSUE HOLDER

Concealed toilet roll tissue holder. Made of stainless steel AISI-304 (1.4301). Polished or brushed finish. Different models available.

REFERENCE	FEATURES	DIMENSIONS
PRP-003		156x156x46 mm

PRP-004

TOILET ROLL TISSUE HOLDER

Toilet roll tissue holder. Made of stainless steel AISI-304 (1.4301). Surface mounted. Surface finish: Polished or brushed. Different models available.

REFERENCE	FEATURES	DIMENSIONS
PRP-004		

ESC

WALL BRUSH CLEANER

Wall brush cleaner made of stainless steel AISI-304 (1.4301). Brushed finish.

REFERENCE	FEATURES	DIMENSIONS
ESC		410x90x90 mm

PP-002

CLOTHES HANGER

Aluminium clothes hanger with 31mm door stop.

REFERENCE	FEATURES	DIMENSIONS
PP-002		93x22x85 mm

GP-001

CLOTHES HOOK

Clothes hook. Made of stainless steel AISI-304 (1.4301). Wall overhang: 40mm. Supplied with all fitting elements. Surface finish: Polished or brushed

REFERENCE	FEATURES	DIMENSIONS
GP-001		50x50x43 mm

PRODUCT IMAGE

GP-002

CLOTHES HOOK

Clothes hook. Made of stainless steel AISI-304 (1.4301). Wall overhang: 46mm. Width: 56mm. Surface finish: Polished or brushed

REFERENCE	FEATURES	DIMENSIONS
GP-002		50x50x43

BP-001

SIDE BAR

Side bar for wall to wall. WC, bidet, wash-basins, bathtub, seat.

REFERENCE	FEATURES	DIMENSIONS
BP-001	Left	153x153x300/825 mm

BP-002

SIDE BAR

Side bar for wall to wall. WC, bidet, wash-basins, bathtub, seat.

REFERENCE	FEATURES	DIMENSIONS
BP-002	Right	153x153x300/825 mm

BP-005

FOLD DOWN BAR

Fold down bar. With toilet roll tissue holder. WC, bidet, vanity bowls

REFERENCE	FEATURES	DIMENSIONS
BP-005		795x100x303 mm

BP-006

CORNER BAR

Horizontal corner bar. Horizontal with 90º angle. Shower bath, bathtub.

REFERENCE	FEATURES	DIMENSIONS
BP-006		762x762 mm

PRODUCT IMAGE

BP-007

SIDE BAR

Horizontal / vertical

REFERENCE	FEATURES	DIMENSIONS
BP-007		305 mm

BP-008

SIDE BAR

Horizontal / vertical

REFERENCE	FEATURES	DIMENSIONS
BP-008		460 mm

BP-018

SIDE BAR

Horizontal / vertical

REFERENCE	FEATURES	DIMENSIONS
BP-018		610 mm

BP-009

SIDE BAR

Horizontal / vertical

REFERENCE	FEATURES	DIMENSIONS
BP-009		760 mm

BP-019

SIDE BAR

Horizontal / vertical

REFERENCE	FEATURES	DIMENSIONS
BP-019		920 mm

PRODUCT IMAGE

BP-010

ANGLE BAR

Angle bar 135º.
WC, bidet, shower bath, bathtub

REFERENCE	FEATURES	DIMENSIONS
BP-010		457x457

BP-012

ANGLE BAR

Angle bar 90º.
WC, bidet, wash basins.

REFERENCE	FEATURES	DIMENSIONS
BP-012	Left	(90º angle) 459x305 mm

BP-013

ANGLE BAR

Angle bar 90º.
WC, bidet, wash basins.

REFERENCE	FEATURES	DIMENSIONS
BP-013	Right	(90º angle) 459x305 mm

BP-014

UPRIGHT BAR

Side bar for wall to floor.
WC, bidet, vanity bowls, bathtub-seat.

REFERENCE	FEATURES	DIMENSIONS
BP-014	Left	153x825x900 mm

BP-015

UPRIGHT BAR

Side bar for wall to floor.
WC, bidet, vanity bowls, bathtub-seat.

REFERENCE	FEATURES	DIMENSIONS
BP-015	Right	153x825x900 mm

PRODUCT IMAGE

ADP-001

LIFT UP CHAIR FOR DISABLED PEOPLE

Lift up chair made of 1.5 mm. thick frosted stainless steel AISI-304.

REFERENCE	FEATURES	DIMENSIONS
ADP-001		380(width)x395(depth) mm

ESP-ANT

VANDAL RESISTANT MIRROR - SECURITY SCREWS NOT INCLUDED

Vandal resistant mirror made of stainless steel AISI-304 (1.4301). Polish fiish
BEST QUALITY STAINLESS STEEL MIRROR.
CUSTOMISED SIZES ON REQUEST.

REFERENCE	FEATURES	DIMENSIONS
ESP-ANT		500x400x0,8 mm 500x500X0,8 mm 650x500X0,8 mm

PRODUCT IMAGE AND DRAWING

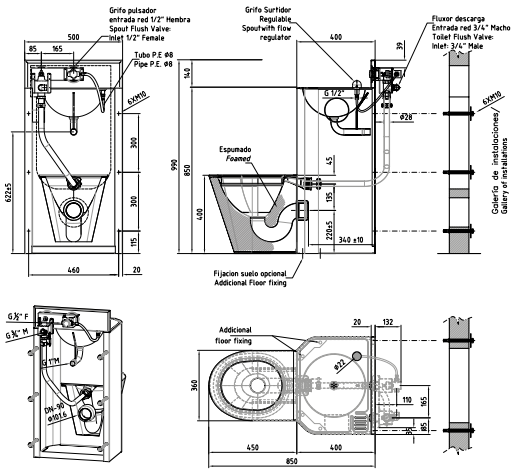

COMBINATION UNIT

FLOOR WC PAN - REAR INSTALLATION

Vandal-proof combination unit equiped with: Stamped wash basin of Ø320 mm. with work-top and soap shapes, WC pan, push-button flush valve for toilet and lavatory, tap and toilet paper holder. Specially designed for prisons, police stations and detention centers. Made of 1.5mm. thick stainless steel AISI-304. Filled with expanded polyurethane foam for sound deadening and to prevent bumps and dents.

Floor standing WC pan.

Customized solutions:
- Without toilet paper holder.
- Without back splash.
- Without drinking spout.
- Installation: Threaded rods 6xM10 for rear installation.

REAR INSTALLATION REQUIRED

REFERENCE	FEATURES
MCC-INP-450-OVC-M10 (PT-PP-2P-1F-1GPT-1G)	STRAIGHT
MCI-INP-450-OVC-M10 (PT-PP-2P-1F-1GPT-1G)	LEFT
MCD-INP-450-OVC-M10 (PT-PP-2P-1F-1GPT-1G)	RIGHT

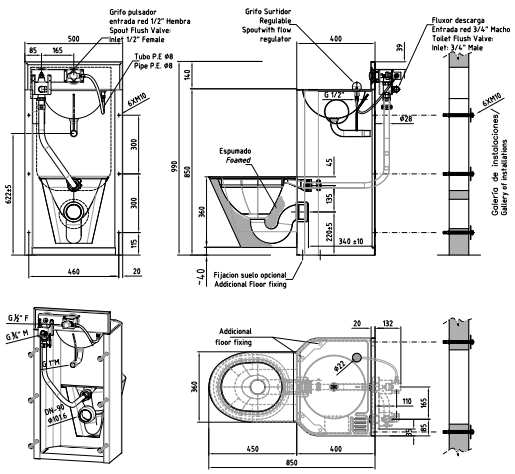

COMBINATION UNIT

HUNG WC PAN - REAR INSTALLATION

Vandal-proof combination unit equiped with: Stamped wash basin of Ø320 mm. with work-top and soap shapes, WC pan, push-button flush valve for toilet and lavatory, tap and toilet paper holder. Specially designed for prisons, police stations and detention centers. Made of 1.5mm. thick stainless steel AISI-304. Filled with expanded polyurethane foam for sound deadening and to prevent bumps and dents.

Wall mounted WC pan.

Customized solutions:
- Without toilet paper holder.
- Without back splash.
- Without drinking spout.
- Installation: Threaded rods 6xM10 for rear installation

REAR INSTALLATION REQUIRED

REFERENCE	FEATURES
MCC-INS-450-OVC-M10 (PT-PP-2P-1F-1GPT-1G)	STRAIGHT
MCI-INS-450-OVC-M10 (PT-PP-2P-1F-1GPT-1G)	LEFT
MCD-INS-450-OVC-M10 (PT-PP-2P-1F-1GPT-1G)	RIGHT

PRODUCT IMAGE AND DRAWING

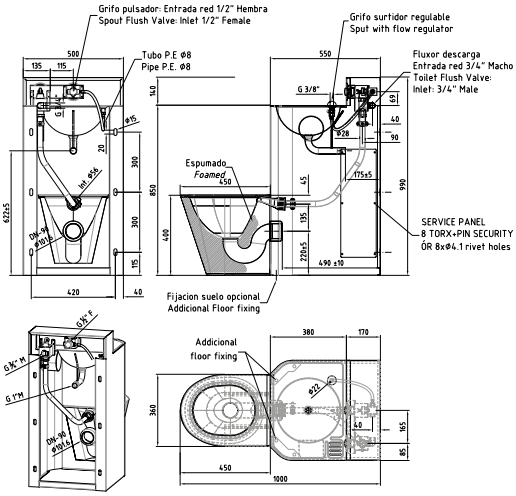

COMBINATION UNIT

FLOOR WC PAN - FRONT INSTALLATION

Combination unit equiped with: Stamped wash basin of □ 320 mm. with work-top and soap shapes, WC pan, push-button flush valve for toilet and basin, tap and toilet paper holder specially designed for prisons, police stations and detention centers. Made of 1.5mm. thick stainless steel AISI-304. Filled with expanded polyurethane foam for sound deadening and to prevent bumps and dents.

Floor standing WC pan.

Customized solutions:
- Without toilet paper holder.
- Without back splash.
- Without drinking spout.

FRONT INSTALLATION REQUIRED VIA ACCESS PANEL

REFERENCE	FEATURES
MCC-INP-450-OVC-PR (PT-PP-2P-1F-1GPT-1G)	STRAIGHT
MCI-INP-450-OVC-PR (PT-PP-2P-1F-1GPT-1G)	LEFT
MCD-INP-450-OVC-PR (PT-PP-2P-1F-1GPT-1G)	RIGHT

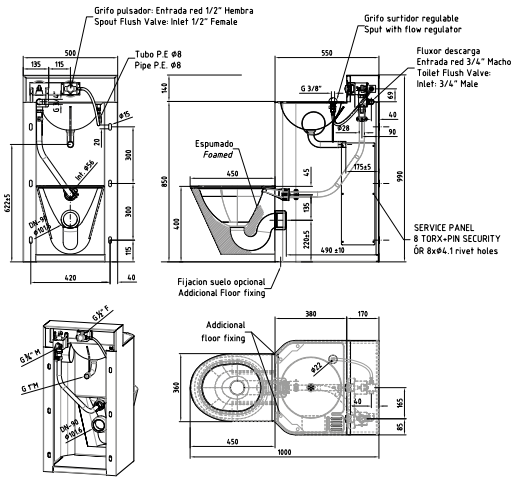

COMBINATION UNIT

HUNG WC PAN - FRONT INSTALLATION

Combination unit equiped with: Stamped wash basin of □ 320 mm. with work-top and soap shapes, WC pan, push-button flush valve for toilet and basin, tap and toilet paper holder specially designed for prisons, police stations and detention centers. Made of 1.5mm. thick stainless steel AISI-304. Filled with expanded polyurethane foam for sound deadening and to prevent bumps and dents.

Hung WC pan.

Customized solutions:
- Without toilet paper holder.
- Without back splash.
- Without drinking spout.
- Different water connection.

FRONT INSTALLATION REQUIRED VIA ACCESS PANEL

REFERENCE	FEATURES
MCC-INS-450-OVC-PR (PT-PP-2P-1F-1GPT-1G)	STRAIGHT
MCI-INS-450-OVC-PR (PT-PP-2P-1F-1GPT-1G)	LEFT
MCD-INS-450-OVC-PR (PT-PP-2P-1F-1GPT-1G)	RIGHT

PRODUCT IMAGE AND DRAWING

INPT-450-REC-M10

FLOOR STANDING WC PAN WITH CONICAL SHAPE

Vandal resistant floor standing WC pan, designed for prisons, police stations and detention centers. Made of stainless steel AISI-304 (1.4301).
Mounting with 4 stainless steel threaded rods M10 through the wall.
Filled with expanded polyurethane foam for sound deadening and to prevent bumps and dents.

Rear installation required

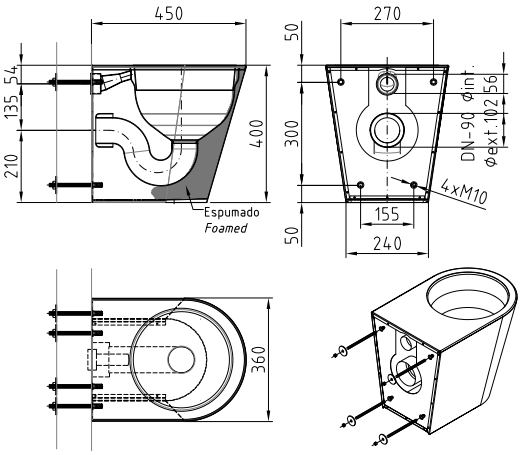

REFERENCE	FEATURES	DIMENSIONS
INPT-450-REC-M10	Satin finish	360x450x400 mm

INPR-450-REC-M10

FLOOR STANDING WC PAN WITH STRAIGHT SHAPE

Vandal resistant floor standing WC pan, designed for prisons, police stations and detention centers. Made of stainless steel AISI-304 (1.4301).
Mounting with 4 stainless steel threaded rods M10 through the wall.
Filled with expanded polyurethane foam for sound deadening and to prevent bumps and dents.

Rear installation required

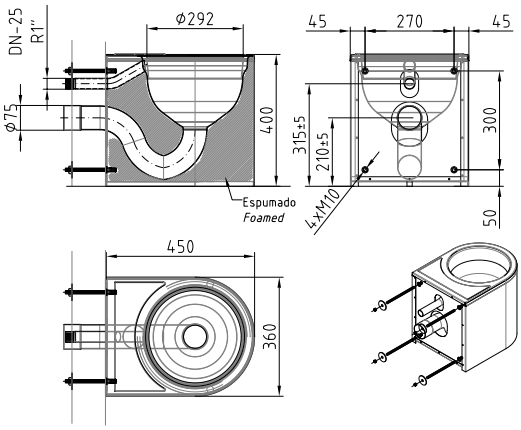

REFERENCE	FEATURES	DIMENSIONS
INPR-450-REC-M10-P	Polish finish	360x450x400 mm
INPR-450-REC-M10-S	Satin finish	360x450x400 mm

PRODUCT IMAGE AND DRAWING

PT-P TRAP

SQUATTING PAN

Stamped squatting pan made of 1.5mm thick stainless steel AISI-304 (1.4301). Satin finish. Foot holder with non-skid surface. For recessed or on top mounting. Supplied with two stainless steel AISI-304 (1.4301) 1/2” gas thread spray nozzles. Straight outlet of Ø100mm.

Customized solutions available.

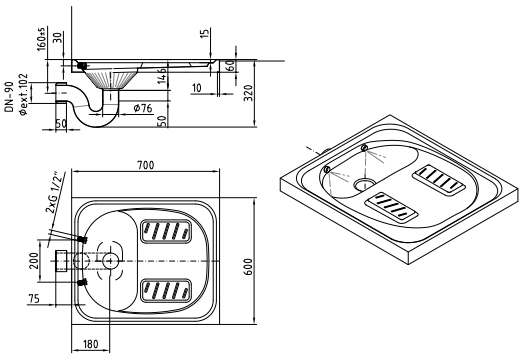

REFERENCE	FEATURES	DIMENSIONS
PT-P TRAP	Vandal proof P-TRAP	600x700x300 mm

URC-M10

WALL HUNG SINGLE URINAL

Vandal-proof wall hung mounted urinal specially designed for prisons, police stations and detention centers. Made of stainless steel AISI 304 (1.4301)
Mounting with 4 stainless steel threaded rods M10 through the wall.
The whole unit is filled with expanded polyurethane.

Supplied with horizontal inlet.

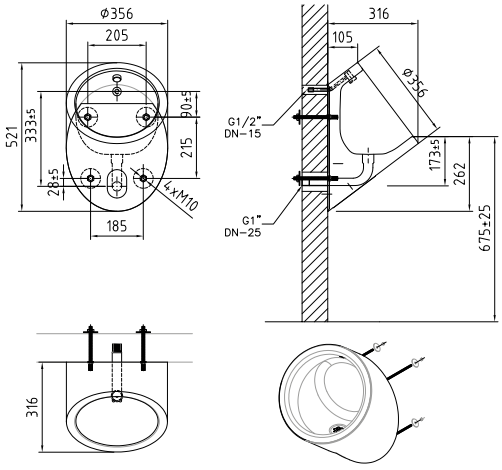

REFERENCE	FEATURES	DIMENSIONS
URC-M10-P	Polished finish	360x300x520 mm
URC-M10-S	Brushed finish	360x300x520 mm

PRODUCT IMAGE AND DRAWING

PDS

SHOWER TRAY

Stamped shower floor plate made of stainless steel AISI 304 (1.4301), 1mm thickness.
Polish finished. Floor with non-skid surface. For recessed mounting.
Vandal-proof drain valve with stainless steel Ø43mm. Outlet pipe.

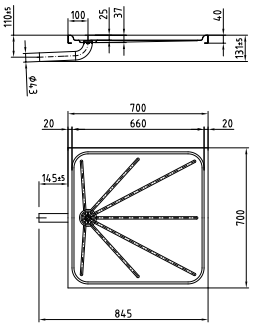

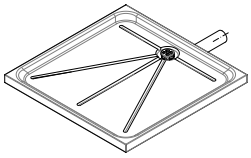

REFERENCE	FEATURES	DIMENSIONS
PDS	Satin finish	700x700x45 mm

LVR-32-SCT

SINGLE WASH BASIN

Vandal resistant wash basin, designed for prisons, police stations and detention centers. Made of stainless steel AISI-304 (1.4301). Supplied with a work top with two soap holders, a bowl with Ø 320mm and a waste pipe of 1” gas thread. Supplied with threaded rods 4xM10 for rear installation. The whole basin is filled with expanded polyurethane.

Ø 360mm BOWL VERSION AVAILABLE

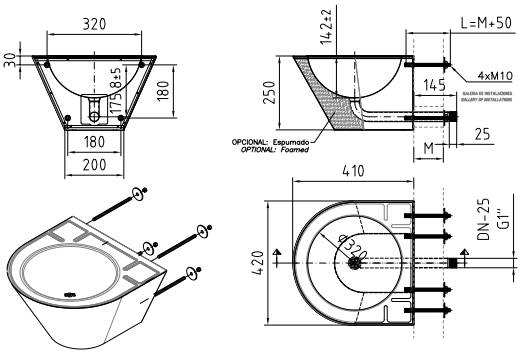

REFERENCE	FEATURES	DIMENSIONS
LVR-32-SCT	Supplied with conical cover. Satin or polish finish.	420x410x250 mm

PRODUCT IMAGE AND DRAWING

LVR-32-SCR

SINGLE WASH BASIN

Vandal resistant wash basin, designed for prisons, police stations and detention centers. Made of stainless steel AISI-304 (1.4301). Supplied with a work top with two soap holders, a bowl with Ø 320mm and a waste pipe of 1” gas thread. Supplied with threaded rods 6xM10 for rear installation. The whole basin is filled with expanded polyurethane.

Ø 360mm BOWL VERSION AVAILABLE

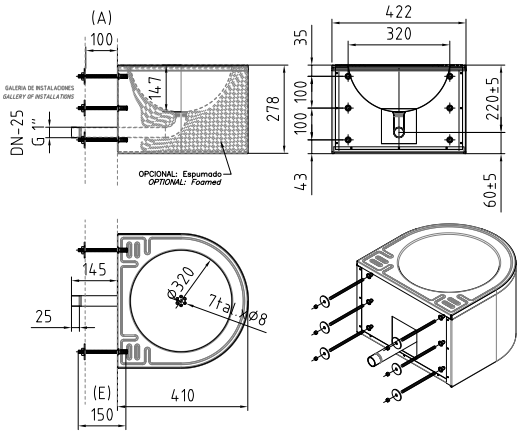

REFERENCE	FEATURES	DIMENSIONS
LVR-32-SCR	Supplied with straight cover. Satin or polish finish.	420x410x280 mm

LVR-32-SAT

SINGLE WASH BASIN

Vandal resistant wash basin, designed for prisons, police stations and detention centers. Manufactured from stainless steel AISI-304 (1.4301). Supplied with a work top with two soap holders, a bowl with Ø 320mm and a waste pipe of 1” gas thread. Supplied with threaded rods 6xM10 for rear installation. Filled with expanded polyurethane foam for sound deadening and to prevent bumps and dents.

Ø 360mm BOWL VERSION AVAILABLE

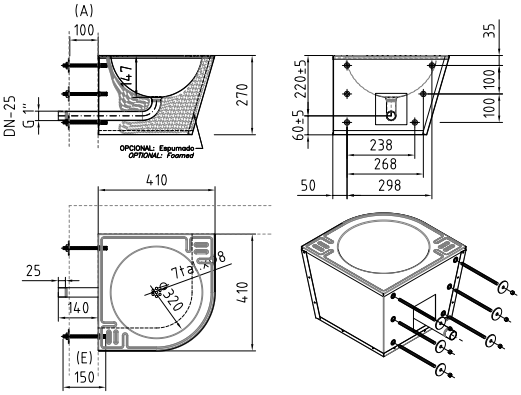

REFERENCE	FEATURES	DIMENSIONS
LVR-32-SAT	Supplied with conical cover. Satin or polish finish.	410x410x280 mm

PRODUCT IMAGE AND DRAWING

LVR-32-SAR

SINGLE WASH BASIN

Vandal resistant wash basin, designed for prisons, police stations and detention centers. Manufactured from stainless steel AISI-304 (1.4301). Supplied with a work top with two soap holders, a bowl with Ø 320mm and a waste pipe of 1” gas thread. Supplied with threaded rods 6xM10 for rear installation. Filled with expanded polyurethane foam for sound deadening and to prevent bumps and dents.

Ø 360mm BOWL VERSION AVAILABLE

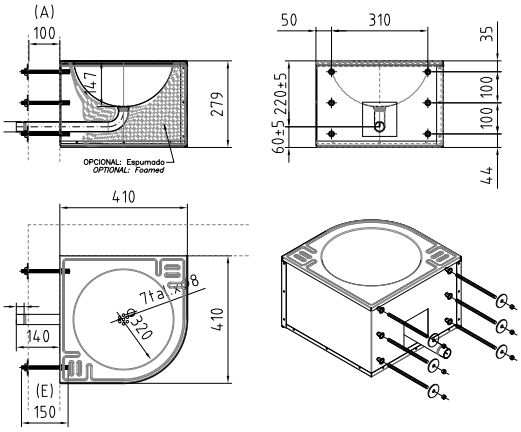

REFERENCE	FEATURES	DIMENSIONS
LVR-32-SAR	Supplied with straight cover. Satin or polish finish.	410x410x280 mm

PRODUCT IMAGE AND DRAWING

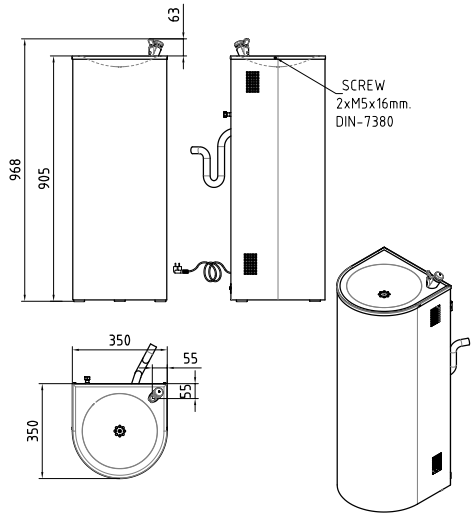

FO-001

DRINKING FOUNTAIN WITH COOLING UNIT

Drinking Fountain with Cooling Unit made of 1mm thick stainless steel AISI-304 (1.4301).
Coolant: R 134A.

Basin polished finish
Cover grinding finish

With glass filler.

REFERENCE	FEATURES	DIMENSIONS
FO-001		360x350x900 mm

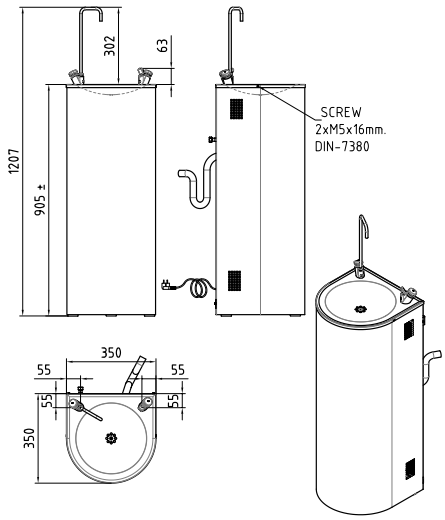

FO-002

DRINKING FOUNTAIN WITH COOLING UNIT

Drinking Fountain with Cooling Unit made of 1mm thick stainless steel AISI-304 (1.4301).
Coolant: R 134A.

Basin polished finish
Cover grinding finish

With bottle and glass filling spout.

REFERENCE	FEATURES	DIMENSIONS
FO-002		360x350x900 mm

PRODUCT IMAGE AND DRAWING

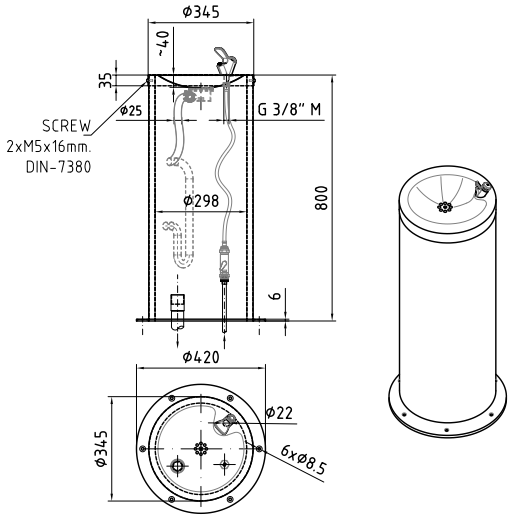

FP-001

DRINKING FOUNTAIN

Drinking fountain for floor installation made of 1mm thick stainless steel. Supplied with a push button water bubbler.

Basin polished finish
Cover grinding finish

* Customized height for children available.

Made of Stainless Steel AISI 304 (1.4301)

REFERENCE	FEATURES	DIMENSIONS
FP-001		345x345x800 mm

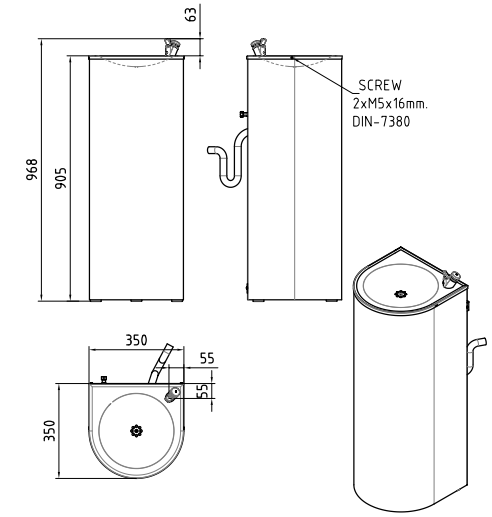

FP-002

DRINKING FOUNTAIN

Public drinking fountain made of 1mm thick stainless steel AISI-304 (1.4301).

Basin polished finish
Cover grinding finish
* Customized height for children available.
With glass filler.

REFERENCE	FEATURES	DIMENSIONS
FP-002		360x350x900 mm

PRODUCT IMAGE AND DRAWING

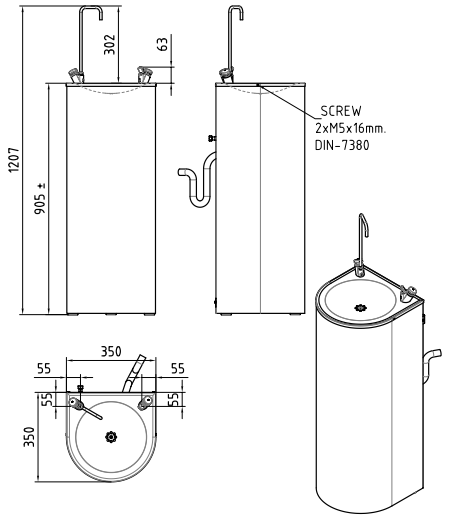

FP-003

DRINKING FOUNTAIN

Public drinking fountain made of 1mm thick stainless steel AISI-304 (1.4301).

Basin polished finish
Cover grinding finish
* Customized height for children available.
With bottle and glass filling spout.

REFERENCE	FEATURES	DIMENSIONS
FP-003		360x350x900 mm

FP-004

DRINKING FOUNTAIN

Wall hung public drinking fountain made of 1mm thick stainless steel AISI-304 18/10 (1.4301).

- With access panel.
- With glass filler.

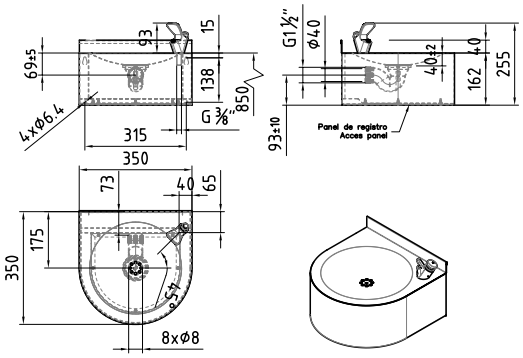

REFERENCE	FEATURES	DIMENSIONS
FP-004-P	Polished finish	350x350x220 mm
FP-004-S	Brushed finish	350x350x220 mm

PRODUCT IMAGE AND DRAWING

FP-005

DRINKING FOUNTAIN WITH COOLING UNIT

Wall hung public drinking fountain made of 1mm thick stainless steel AISI-304 18/10 (1.4301).

- With access panel.
- With glass and bottle filler.

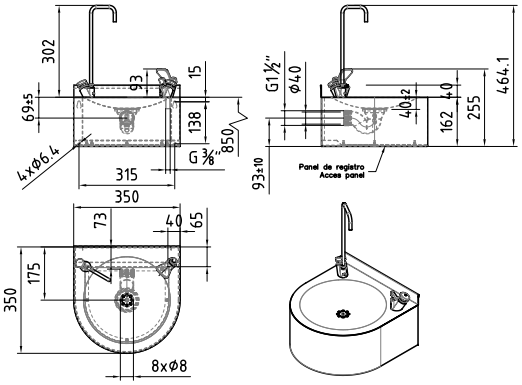

REFERENCE	FEATURES	DIMENSIONS
FP-005-P	Polished finish	350x350x220 mm
FP-005-S	Brushed finish	350x350x220 mm

FO-TH-001/002

NEW

DRINKING FOUNTAIN WITH NEW COOLING UNIT

BUBBLER INCLUDED
Cooled drinking fountain made of 1mm thick stainless steel AISI-304 (1.4301). With ice tamb.

Basin polished finish
Cover grinding finish.

FO-TH-001: Supplied only with a bubbler.
FO-TH-002: Supplied with a bubbler and bottle filler tap.

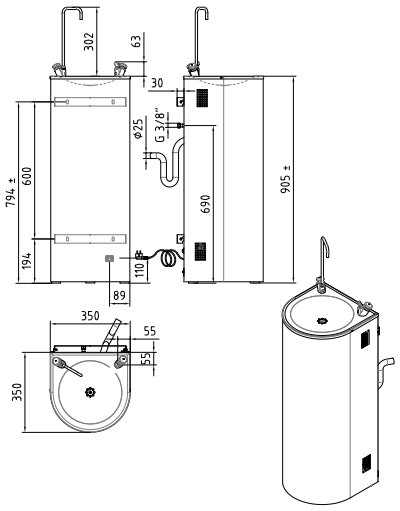

REFERENCE	FEATURES	DIMENSIONS
FO-TH-001	Brushed finish	350x350x900 mm
FO-TH-002	Brushed finish	350x350x900 mm

REFERENCE	CATEGORY	PAGE
ADP-001	Bathroom Accessories	49
BP-001	Bathroom Accessories	46
BP-002	Bathroom Accessories	46
BP-005	Bathroom Accessories	46
BP-006	Bathroom Accessories	46
BP-007	Bathroom Accessories	47
BP-008	Bathroom Accessories	47
BP-009	Bathroom Accessories	47
BP-010	Bathroom Accessories	48
BP-012	Bathroom Accessories	48
BP-013	Bathroom Accessories	48
BP-014	Bathroom Accessories	48
BP-015	Bathroom Accessories	48
BP-018	Bathroom Accessories	47
BP-019	Bathroom Accessories	47
DM-OVC-B	WC Pans	35
DM-OVC-W	WC Pans	35
DM-OVD-B	WC Pans	30
DM-OVD-W	WC Pans	30
DM-REC-B	WC Pans	37
DM-REC-W	WC Pans	37
DP-001	Bathroom Accessories	43
DP-002	Bathroom Accessories	43
DP-003	Bathroom Accessories	44
DP-004	Bathroom Accessories	44
DT-001	Bathroom Accessories	43
ESC	Bathroom Accessories	45
ESP-ANT	Bathroom Accessories	49
FO-001	Drinking Fountains	59
FO-002	Drinking Fountains	59
FP-001	Drinking Fountains	60
FP-002	Drinking Fountains	60
FP-003	Drinking Fountains	61
FP-004-P	Drinking Fountains	61
FP-004-S	Drinking Fountains	61
FP-005-P	Drinking Fountains	62
FP-005-S	Drinking Fountains	62
FP-TH-001	Drinking Fountains	62
FP-TH-002	Drinking Fountains	62
GP-001	Bathroom Accessories	45
GP-002	Bathroom Accessories	46
INP-535-OVC-P	WC Pans	30
INP-535-OVC-S	WC Pans	30

REFERENCE	CATEGORY	PAGE
INP-535-OVD-P	WC Pans	25
INP-535-OVD-S	WC Pans	25
INP-580-REC-PR-P	WC Pans	35
INP-580-REC-PR-S	WC Pans	35
INP-655-OVC-PR-P	WC Pans	31
INP-655-OVC-PR-S	WC Pans	31
INP-655-OVC-TB-PR-P	WC Pans	33
INP-655-OVC-TB-PR-S	WC Pans	33
INP-655-OVD-PR-P	WC Pans	25
INP-655-OVD-PR-S	WC Pans	25
INP-655-OVD-TB-PR-P	WC Pans	28
INP-655-OVD-TB-PR-S	WC Pans	28
INP-655-REC-TB-PR-P	WC Pans	36
INP-655-REC-TB-PR-S	WC Pans	36
INP-700-OVC-PR-P	WC Pans	31
INP-700-OVC-PR-S	WC Pans	31
INP-700-OVC-TB-PR-P	WC Pans	34
INP-700-OVC-TB-PR-S	WC Pans	34
INP-700-OVD-PR-P	WC Pans	26
INP-700-OVD-PR-S	WC Pans	26
INP-700-OVD-TB-PR-P	WC Pans	28
INP-700-OVD-TB-PR-S	WC Pans	28
INPR-450-REC-M10	Penal Ware	54
INPT-450-REC-M10	Penal Ware	54
INS-535-OVC-P	WC Pans	32
INS-535-OVC-S	WC Pans	32
INS-535-OVD-P	WC Pans	26
INS-535-OVD-S	WC Pans	26
INS-535-REC-PR-P	WC Pans	36
INS-535-REC-PR-S	WC Pans	36
INS-655-OVC-PR-P	WC Pans	32
INS-655-OVC-PR-S	WC Pans	32
INS-655-OVC-TB-PR-P	WC Pans	34
INS-655-OVC-TB-PR-S	WC Pans	34
INS-655-OVD-PR-P	WC Pans	27
INS-655-OVD-PR-S	WC Pans	27
INS-655-OVD-TB-PR-P	WC Pans	29
INS-655-OVD-TB-PR-S	WC Pans	29
INS-700-OVC-P	WC Pans	33
INS-700-OVC-S	WC Pans	33
INS-700-OVD-P	WC Pans	27
INS-700-OVD-S	WC Pans	27
INS-700-OVD-TB-PR-P	WC Pans	29

ALPHABETICAL INDEX SANITARY**WARE.**

REFERENCE	CATEGORY	PAGE
INS-700-OVD-TB-PR-S	WC Pans	29
LVC-600	Wash Basins	12
LVC-1200	Wash Basins	12
LVC-1800	Wash Basins	12
LVC-2400	Wash Basins	12
LVC-G-1200	Wash Basins	13
LVC-G-1800	Wash Basins	13
LVC-G-2400	Wash Basins	13
LVC-G-1200-D	Wash Basins	13
LVC-G-1800-D	Wash Basins	13
LVC-G-2400-D	Wash Basins	13
LVC-I-1200	Wash Basins	14
LVC-I-1800	Wash Basins	14
LVC-IN-1200	Wash Basins	14
LVC-IN-1800	Wash Basins	14
LVC-P-600	Wash Basins	12
LVC-P-1200	Wash Basins	12
LVC-P-1800	Wash Basins	12
LVC-P-2400	Wash Basins	12
LVE-600	Wash Basins	10
LVE-1200	Wash Basins	11
LVE-1800	Wash Basins	11
LVE-2400	Wash Basins	11
LVK-30	Wash Basins	16
LVM-040	Utility Sinks	40
LVM-040-D	Utility Sinks	40
LVM-041	Utility Sinks	40
LVM-041-D	Utility Sinks	40
LVM-042	Utility Sinks	40
LVM-042-D	Utility Sinks	40
LVP-040	Utility Sinks	40
LVP-040-D	Utility Sinks	40
LVP-041	Utility Sinks	40
LVP-041-D	Utility Sinks	40
LVP-042	Utility Sinks	40
LVP-042-D	Utility Sinks	40
LVR-32-C	Wash Basins	5
LVR-32-CR	Wash Basins	5
LVR-32-S	Wash Basins	6
LVR-32-SAR	Penal Ware	58
LVR-32-SAT	Penal Ware	57
LVR-32-SC-R-1B-F	Wash Basins	10
LVR-32-SC-R-2B-F	Wash Basins	10

REFERENCE	CATEGORY	PAGE
LVR-32-SCR	Penal Ware	57
LVR-32-SCT	Penal Ware	56
LVR-36-C	Wash Basins	4
LVR-36-E	Wash Basins	4
LVR-36-N	Wash Basins	7
LVR-36-NC	Wash Basins	8
LVR-36-S	Wash Basins	7
LVR-ALPHA	Wash Basins	9
LVR-ECO-560	Wash Basins	15
LVR-D-525	Wash Basins	15
LVR-H-36	Wash Basins	9
LVR-OMEGA	Wash Basins	8
LVO-OVAL	Wash Basins	6
MCC-INP-450-OVC-M10	Penal Ware	52
MCI-INP-450-OVC-M10	Penal Ware	52
MCD-INP-450-OVC-M10	Penal Ware	52
MCC-INS-450-OVC-M10	Penal Ware	52
MCI-INS-450-OVC-M10	Penal Ware	52
MCD-INS-450-OVC-M10	Penal Ware	52
MCC-INP-450-OVC-PR	Penal Ware	53
MCI-INP-450-OVC-PR	Penal Ware	53
MCD-INP-450-OVC-PR	Penal Ware	53
MCC-INS-450-OVC-PR	Penal Ware	53
MCI-INS-450-OVC-PR	Penal Ware	53
MCD-INS-450-OVC-PR	Penal Ware	53
PD-700	Shower Trays	38
PDH-1000	Shower Trays	39
PDH-900	Shower Trays	39
PDN-800	Shower Trays	38
PDS	Penal Ware	56
PP-002	Bathroom Accessories	45
PRP-001	Bathroom Accessories	44
PRP-001E	Bathroom Accessories	44
PRP-002	Bathroom Accessories	44
PRP-003	Bathroom Accessories	45
PRP-004	Bathroom Accessories	45
PT-P-TRAP	Penal Ware	55
PT-S	WC Pans	37
SM-001	Bathroom Accessories	43
SM-002	Bathroom Accessories	43
URB-FF-P	Urinals	19
URB-FF-S	Urinals	19
URB	Urinals	18

REFERENCE	CATEGORY	PAGE
URB-A	Urinals	23
URB-E-24V	Urinals	18
URB-E-4X6V	Urinals	18
URB-E-230V	Urinals	18
URB-EI-24V	Urinals	18
URB-EI-4X6V	Urinals	18
URC-M10-P	Penal Ware	55
URC-M10-S	Penal Ware	55
URC	Urinals	18
URC-E-24V	Urinals	18
URC-E-4X6V	Urinals	18
URC-E-230V	Urinals	18
URC-SEP-P	Urinals	22
URC-SEP-S	Urinals	22
URE-600	Urinals	20
URE-1200	Urinals	20
URE-1800	Urinals	20
URE-2400	Urinals	20
URE-1200-P	Urinals	21
URE-1800-P	Urinals	21
URE-2400-P	Urinals	21
URE-1200-P-SEP	Urinals	21
URE-1800-P-SEP	Urinals	21
URE-2400-P-SEP	Urinals	21
URE-1200-SEP	Urinals	22
URE-1800-SEP	Urinals	22
URE-2400-SEP	Urinals	22
URF-700	Urinals	19
URF-E-24V	Urinals	19
URF-E-4X6V	Urinals	19
URF-E-230V	Urinals	19
URF-EI-24V	Urinals	19
URF-EI-4X6V	Urinals	19
URK-50	Urinals	23
URM-1200	Urinals	20
URM-1800	Urinals	20
URM-2300	Urinals	20
URM-1200-SEP	Urinals	20
URM-1800-SEP	Urinals	20
URM-2300-SEP	Urinals	20
US-IN-455-G	Utility Sinks	42
US-IN-550	Utility Sinks	41
US-IN-560	Utility Sinks	41

portinox.com

PORTINOX
THIELMANN CONTAINER SYSTEMS

THIELMANN PORTINOX SPAIN S.A.
Ctra de Pulianas, km 6.
ES18197 - Pulianas - Granada - Spain
Tel.: +34 958 406000
E-mail: sanitary@portinox.com